产品概述 GENERAL SPECIFICATION

工作条件

标准电机可适用于大多数的场合和环境。标准电机运行环境温度为-20℃到+40℃，海拔不超过1000米。

温升和绝缘

标准电动机按F级绝缘设计，按B级温升考核，提高了电动机的使用寿命和可靠性。

冷却和通风

根据IEC 60034-6中IC411的规定，标准冷却方式为全封闭自扇冷（TEFC)。

防护等级

电动机的防护等级为IP55。可以用于含尘和潮湿环境。也可提供具有更高防护等级的电动机。

接线盒

所有电机的接线盒的尺寸设计都便于安装和维护。

电压

标准电压是415V 50Hz, 400V 50Hz和380V 50Hz,可设计200-660V范围内任一电压值的50HZ的电动机。

起动

直接起动适用于所有机座号的电机。2.2KW以上的单速，单电压电机按要求设有6个端点可用于三角起动。 所有的电机直接起动时都符合IEC 60034-12要求。

轴

轴直径按照IEC 60072设计.所有电机的驱动端轴上都安装了螺纹孔可方便安装，移动和重置。

动平衡

所有电机的动平衡都符合IEC 60072. 也可以使用特殊动平衡。

主要性能参数公差

使用IEC 60034-1界定效率,功率因数,转速,堵转转矩,输出转矩,起动转矩和转动惯量的允许公差值。

质量测试

所有电机都经过严格的机械测试，并都通过了制作中途和最后阶段的机电测试。还有一些电机是根据客户的特定要求设计。

质量保证

从产品设计到产品出厂，根据ISO9001质量认证体系，严格遵守质量程序。我们的工厂已经达到这些要求，进一步确保生产更高品质的电机。

SPECIFICATION

Standard motors are suitable for almost all applications and are designed to operate in an ambient temperature of -20℃ to +40℃ and at an altitude not exceeding 1000m above sea level.

INSULATION AND TEMPERATURE RISE

Standard motors are designed complying with Class F insulation system, but temperature rise is checked according to Class B.That improves motor's useful life and reliability。

COOLING

The standard cooling method is Totally Enclosed Fan Cooled (TEFC) in accordance with code IC 411 of IEC 60034-6.

ENCLOSURE

The standard protection degree is IP55, which offer complete protection against contacting with live or moving parts inside the enclosure and against water splashing from any direction. More higher degree of protection is available.

TERMINAL BOX

Terminal boxes on all motors are of a generous size for easy of connection and maintenance.

VOLTAGE

Standard voltage are 415V 50Hz, 400V 50Hz and 380V 50Hz, but any single voltage in the range of 200-660V could be designed.

STARTING

Direct-on-line starting can be used on all frame sizes. Single speed, single voltage motors above 2.2kW are provided with 6 terminals that can be used for star-delta starting if required. All motors, when started direct-on-line, will meet the requirements of IEC 60034-12.

SHAFTS

All shaft diameters are machined to IEC 60072.For ease of fitting, removing or securring fitments, a tapped hole in the drive end shaft is provided as standard on all motor shafts.

BALANCE

All motors are dynamically balance to IEC 60072. Reduced and special balances are available.

TOLERANCES ON MAIN PERFORMANCE PARAMETERS

IEC 60034-1, specifies allow tolerances for efficiency, power factor, speed, locked rotor torque, pullout torque, starting current and moment of inertia.

QUALITY TESTING

All motors are tested to strict engineering tolerances and are subject to mechanical and electrical tests at intermediate and final stages of manufacture. Individual motors are also tested to specific customer requirements.

QUALITY ASSURANCE

Stringent quality procedures are observed from first design to finished product in accordance with the ISO9001 documented quality systems.Our factory has assessed to meeting these requirements, a further assurance that only the highest possible standards of quality are accepted.

6POLES –1000 RPM SYNCHRONOUS SPEED 50Hz IE2

型号	功率 (kW)	额定转速 (r/min)	额定 380V(A)	额定 400V(A)	额定 415V(A)	效 率			功率因数			堵转电流 /额定电流	额定转矩 (N.m)	堵转转矩 /额定转矩	最大转矩 /额定转矩	惯 量 (kg.m²)	噪音 dB(A)	重量 (kg)
Type	output (kW)	Speed (r/min)	Rated Current			Efficiency %FL			Power factor %FL			Ist/In	Tn (N.m)	Tst/Tn	Tmax/Tn	J (kg.m²)	Noise dB(A)	Weight (kg)
			380V(A)	400V(A)	415V(A)	100	75	50	100	75	50							
90S–6	0.75	935	2.1	2.0	2.0	75.9	76.2	73.1	0.70	0.64	0.58	5.8	7.7	2.1	2.1	0.0057	57	27
90L–6	1.1	940	3.1	2.9	2.8	78.1	77.8	75.1	0.70	0.62	0.59	5.9	11.2	2.1	2.1	0.0072	57	31
100L–6	1.5	950	3.9	3.7	3.6	79.8	80.1	78.0	0.73	0.69	0.58	6.0	15.1	2.1	2.1	0.0144	61	39
112M–6	2.2	950	5.6	5.3	5.1	81.8	82.5	81.3	0.73	0.69	0.56	6.0	22.1	2.0	2.1	0.0229	65	50
132S–6	3	960	7.5	7.1	6.9	83.3	84.1	83.1	0.73	0.7	0.58	6.2	29.8	2.0	2.1	0.039	69	63
132M1–6	4	960	9.7	9.2	8.9	84.6	85.5	84.8	0.74	0.71	0.60	6.8	39.8	2.0	2.1	0.0499	69	69
132M2–6	5.5	965	13.1	12.5	12.0	86	86.8	86.3	0.74	0.73	0.61	7.1	54.4	2.0	2.1	0.0714	69	84
160M–6	7.5	970	17.7	16.8	16.2	87.2	87.4	86.3	0.74	0.73	0.62	6.7	73.8	2.1	2.1	0.1248	71	121
160L–6	11	970	25.5	24.2	23.3	88.7	88.8	87.7	0.74	0.73	0.62	6.9	108.3	2.1	2.1	0.18	73	153
180L–6	15	975	33.0	31.3	30.2	89.7	90.0	89.2	0.77	0.77	0.67	7.2	146.9	2.0	2.1	0.3415	73	194
200L1–6	18.5	980	38.9	36.9	35.6	90.4	90.7	90.0	0.80	0.79	0.70	7.2	180.3	2.1	2.1	0.4894	75	244
200L2–6	22	980	46.0	43.7	42.1	90.9	91.2	90.6	0.80	0.79	0.70	7.3	214.4	2.1	2.1	0.552	75	273
225M–6	30	985	61.4	58.3	56.2	91.7	92.0	91.4	0.81	0.82	0.76	7.1	290.9	2.0	2.1	0.7063	76	312
250M–6	37	985	72.6	69.0	66.5	92.2	92.4	92.0	0.84	0.83	0.77	7.1	358.7	2.1	2.1	1.1189	78	413
280S–6	45	985	87.8	83.4	80.4	92.7	92.8	92.1	0.84	0.83	0.75	7.2	436.3	2.1	2.0	2.1645	80	557
280M–6	55	985	106.9	101.5	97.8	93.1	93.2	92.6	0.84	0.83	0.76	7.2	533.2	2.1	2.0	2.6692	80	611
315S–6	75	990	144.8	137.5	132.6	93.7	93.6	92.8	0.84	0.82	0.77	6.7	723.5	2.0	2.0	4.11	85	847
315M–6	90	990	173.2	164.5	158.6	94	93.9	93.2	0.84	0.82	0.79	6.7	868.2	2.0	2.0	4.8746	85	1031
315L1–6	110	990	211.0	200.4	193.2	94.3	94.2	93.5	0.84	0.82	0.79	6.7	1061.1	2.0	2.0	5.9125	85	1182
315L2–6	132	990	249.4	236.9	228.4	94.6	94.4	94.0	0.85	0.81	0.80	6.7	1273.3	2.0	2.0	6.9504	85	1323
355M1–6	160	990	294.8	280.0	269.9	94.8	94.7	93.7	0.87	0.85	0.82	6.7	1543.4	2.0	2.0	9.9993	90	1582
355M2–6	200	990	367.7	349.3	336.7	95	94.9	94.2	0.87	0.85	0.83	6.7	1929.3	2.0	2.0	11.1898	90	1664
355L–6	250	990	459.6	436.6	420.8	95	94.9	94.2	0.87	0.86	0.84	6.7	2411.6	2.0	2.0	14.0614	92	1757

- Tn=Rated Torque
- IST=Locked Rotor Current
- TST=Locked Rotor Torque
- TM=Maxium Torque
- In=Rated Current

执行标准 STANDARDS COMPLIANCE

防护等级 (IEC 60034-5) DEGREES OF PROTECTION (IEC 60034–5)

符号	第一位数字	第二位数字
5	防止固体异物进入内部及防止人体接触内部的带电或运动部分。 能防止灰尘进入达到影响电机正常运行的速度。完全防止触及壳内带电或运动部分。	防水 任何方向的喷水对电机应无有害的影响。
6	完全防尘	强力喷水时电机应无有害的影响。
IP55	防尘	防喷水
IP56	防尘	防强力喷水
IP65	完全防尘	防喷水
IP66	完全防尘	防强力喷水
Code	First Digit	Second Digit
5	Protection against contact and ingress of foreign bodies. Protection against hazardous "Live" parts and moving mechanical parts Ingress of dust is not totally prevented, but dust shall not interfere with the satisfactory operation of equipment.A probe of 1mm diameter shall not penetrate the enclosure	Protection against water Water projected in jets against the enclosure from any direction will have no harmful effects.
6	No ingress of dust	Water projected in power jets shall have no harmful effects.
IP55	Dust Protected	Jetting Water
IP56	Dust Protected	Powerful jetting
IP65	Dust Tight	Jetting Water
IP66	Dust Tight	Powerful jetting

安装方式（IEC60034-7） MOUNTING ARRANGEMENTS

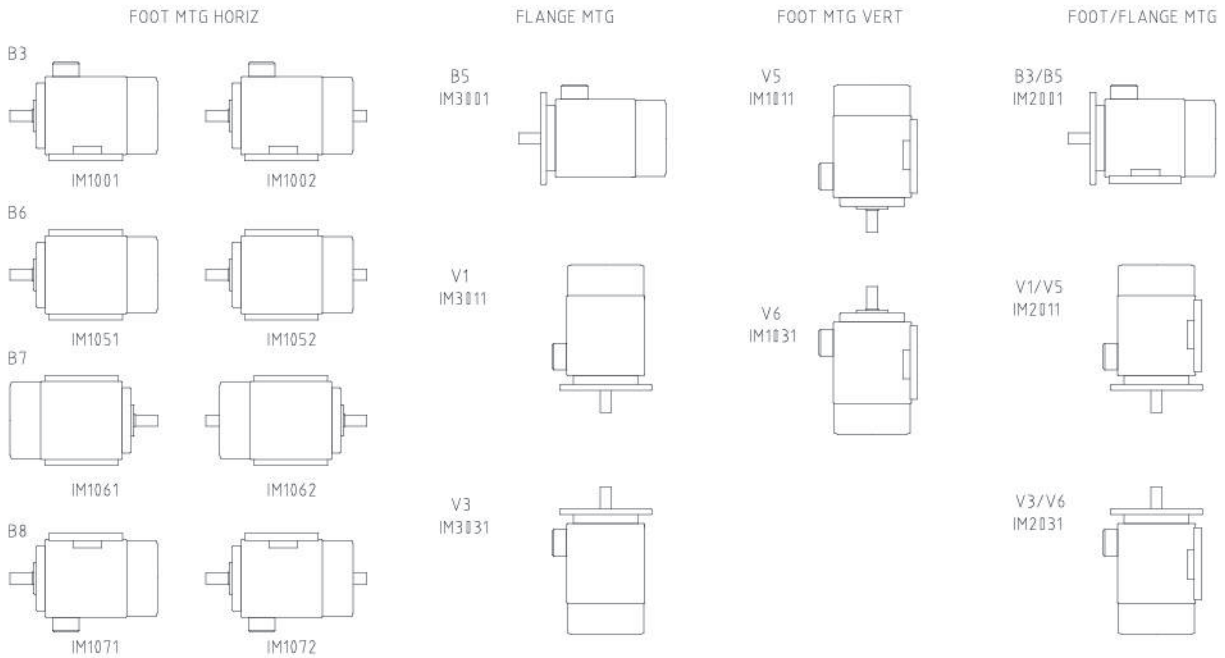

接线图 CONNECTION DIAGRAMS

Three Phase motors with cage rotor

单绕组双速电动机
Multi-speed motors In Dahlander connection (Tapped winding)

双绕组双速电动机
Multi-speed motors with 2 separate Windings

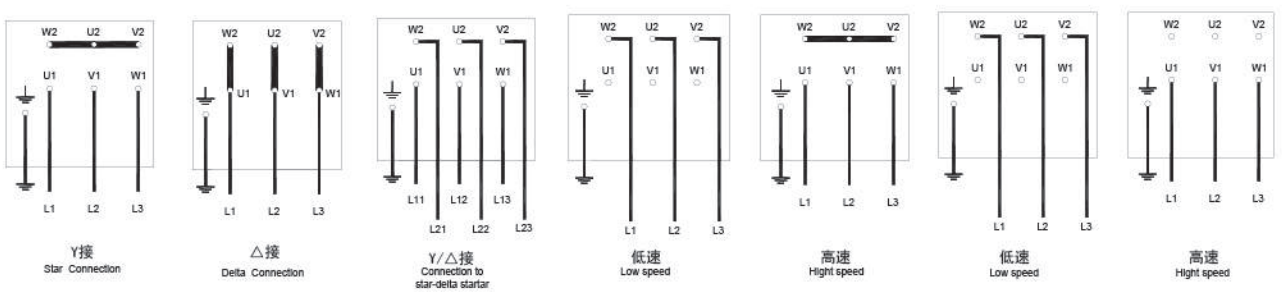

RYJ，RYJ2 系列三相异步电动机
RYJ，RYJ2 SERIES THREE-PHASE INDUCTION MOTOR

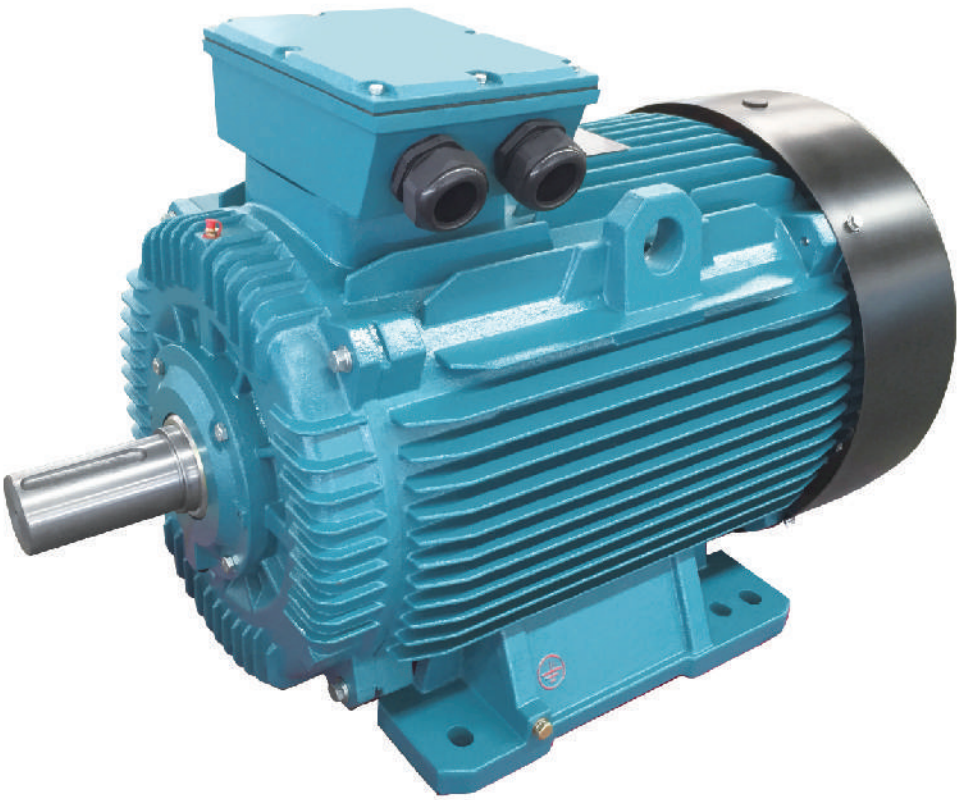

中心高：H80~355mm
额定输出功率：0.75kW~375kW
能效等级级：EFF2，IE2，IE3
防护等级：IP55
绝缘/温升等级：F/B,H/B
Frame Size:80~355
Rated Power:0.75kw~375kw
DEGREES OF EFFICIENCY：EFF2，IE2，IE3
Degrees of Protection:IP55
Degrees of Insulation:F/B,H/B

80-132 FRAME

Parts Description 零部件名称

1. Oil seal D.E. 驱动端油封
2.Wave Spring D.E. 波形弹簧
3.Bearing D.E. 驱动端轴承
4.Endshield D.E. 驱动端端盖
5.Terminal Box 接线盒
6.Terminal Box Lid 接线盒盖
7.Stator Lamination Pack 定子铁芯
8.Rotor with shaft 转子带轴
9.Stator Frame . 机座
10.Endshield N.D.E. 非驱动端端盖
11.Bearing N.D.E. 非驱动端轴承
12. Oil seal N.D.E. 非驱动端油封
13.Fan 风扇
14.Fan Cowl 风罩

Mounting 安装

B3–Foot mounted 卧式底脚安装
B5–Flange mounted–horizontal. 卧式法兰安装
B3/B5–Foot and Flange mounted 底脚法兰安装
V1–Flange mounted–vertical 立式法兰安装

Specification 基本结构说明

Standard Construction 标准构造
Cast iron Frame,Endshields.Terminal Box.
铸铁机座，端盖和接线盒
Pressed Steel Fan Cowl. 钢板风罩
Cast iron Bearings cover 铸铁轴盖
Polypropylene,glass reinforced Fan
聚丙烯玻璃纤维风扇

Features 特性

Dimensions and ratings to IEC60072.
电机尺寸和额定功率符合IEC 60072
IP55
Top mounted Terminal Box
顶出线接线盒
Terminal Box rotates in 90 deg. Increments
接线盒可90度旋转
Drilled and tapped hole in D.E.of shaft
轴伸端钻孔绞丝
Cooling IC411 冷却方式 IC411

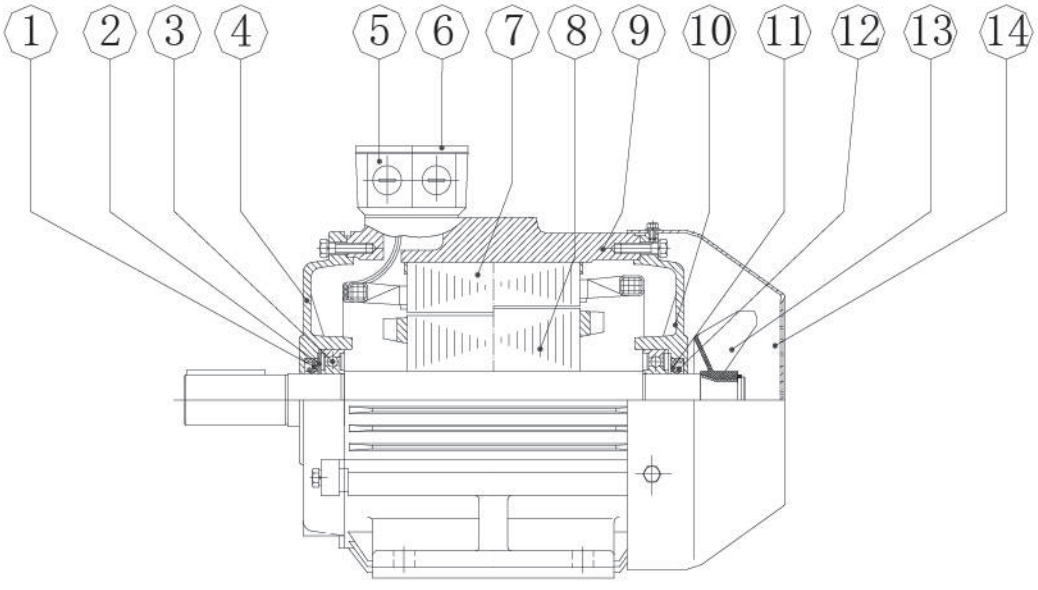

160-280 FRAME

Parts Description 零部件名称

1. Oil seal D.E. 驱动端油封
2.Endshield D.E. 驱动端端盖
3.Wave Spring D.E. 波形弹簧
4.Bearing D.E. 驱动端轴承
5.Inner Bearing Cover D.E.
驱动端轴承内盖
6.Terminal Box 接线盒
7.Terminal Box Lid 接线盒盖
8.Stator Lamination Pack 定子铁芯
9.Rotor with shaft 转子带轴
10.Stator Frame . 机座
11.Inner Bearing Cover N.D.E.
非驱动端轴承内盖
12.Bearing N.D.E. 非驱动端轴承
13.Endshield N.D.E. 非驱动端端盖
14.Oil seal N.D.E. 非驱动端油封
15.Fan 风扇
16.Fan Cowl 风罩

Mounting 安装

B3–Foot mounted 卧式底脚安装
B5–Flange mounted–horizontal. 卧式法兰安装
B35–Foot and Flange mounted 底脚法兰安装
V1–Flange mounted–vertical 立式法兰安装

Specification 基本结构说明

Standard Construction 标准构造
Cast iron Frame,Endshields.Terminal Box.
铸铁机座，端盖和接线盒
Pressed Steel Fan Cowl. 钢板风罩
Cast iron Bearings cover 铸铁轴盖
Polypropylene,glass reinforced Fan
聚丙烯玻璃纤维风扇
NSK or equivalent Bearings
NSK或同等轴承

Features 特性

Dimensions and ratings to IEC60072.
电机尺寸和额定功率符合IEC 60072
IP55
Top mounted Terminal Box
顶出线接线盒
Terminal Box rotates in 90 deg. Increments
接线盒可90度旋转
Drilled and tapped hole in D.E.of shaft
轴伸端钻孔绞丝
Cooling IC411 冷却方式 IC411

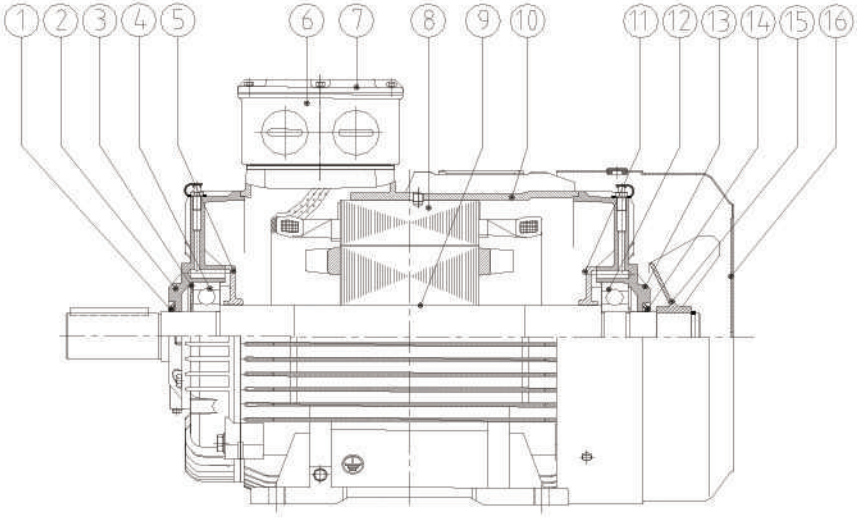

315-355 FRAME

Parts Description 零部件名称

1. Oil seal D.E. 驱动端油封
2.Endshield D.E. 驱动端端盖
3.Wave Spring D.E. 波形弹簧
4.Bearing D.E. 驱动端轴承
5.Inner Bearing Cover D.E.
驱动端轴承内盖
6.Terminal Box 接线盒
7.Terminal Box Lid 接线盒盖
8.Stator Lamination Pack 定子铁芯
9.Rotor with shaft 转子带轴
10.Stator Frame . 机座
11.Inner Bearing Cover N.D.E.
非驱动端轴承内盖
12.Bearing N.D.E. 非驱动端轴承
13.Endshield N.D.E. 非驱动端端盖
14.Oil seal N.D.E. 非驱动端油封
15.Fan 风扇
16.Fan Cowl 风罩

Mounting 安装

B3–Foot mounted 卧式底脚安装
B5–Flange mounted–horizontal. 卧式法兰安装
B35–Foot and Flange mounted 底脚法兰安装
V1–Flange mounted–vertical 立式法兰安装

Specification 基本结构说明

Standard Construction 标准构造
Cast iron Frame,Endshields.Terminal Box.
铸铁机座，端盖和接线盒
Pressed Steel Fan Cowl. 钢板风罩
Cast iron Bearings cover 铸铁轴盖
Polypropylene,glass reinforced Fan
聚丙烯玻璃纤维风扇

Features 特性

Dimensions and ratings to IEC60072.
电机尺寸和额定功率符合IEC 60072
IP55
Top mounted Terminal Box
顶出线接线盒
Terminal Box rotates in 90 deg. Increments
接线盒可90度旋转
Drilled and tapped hole in D.E.of shaft
轴伸端钻孔绞丝
Cooling IC411 冷却方式 IC411

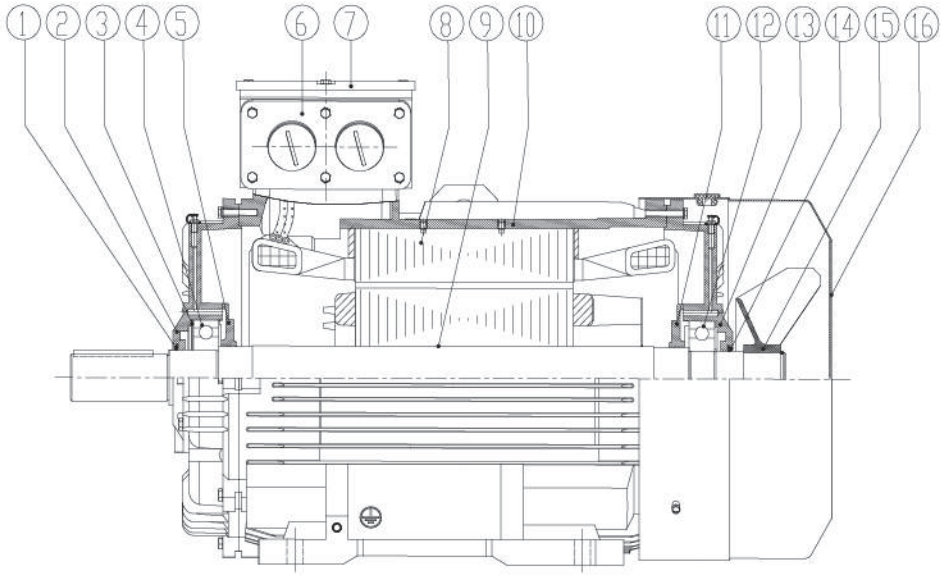

315-355

2 POLES – 50Hz 3000 RPM SYNCHRONOUS SPEED EFF2

型号	功率 (kW)	额定转速 (r/min)	额定 380V(A)	额定 400V(A)	额定 415V(A)	效 率			功率因数			堵转电流/额定电流	额定转矩 (N.m)	堵转转矩/额定转矩	最大转矩/额定转矩	惯 量 (kg.m²)	噪音 dB(A)	重量 (kg)
Type	output (kW)	Speed (r/min)	Rated Current			Efficiency		%FL	Power factor		%FL	Ist/In	Tn (N.m)	Tst/Tn	Tmax/Tn	J (kg.m²)	Noise dB(A)	Weight (kg)
			380V(A)	400V(A)	415V(A)	100	75	50	100	75	50							
80M1-2	0.75	2840	1.8	1.7	1.7	75	74.3	71.5	0.83	0.81	0.67	5.5	2.5	2.2	2.5	0.001	61	18
80M2-2	1.1	2845	2.6	2.5	2.4	76.2	78.2	75.3	0.84	0.79	0.67	5.5	3.7	2.2	2.6	0.001	63	19
90S-2	1.5	2850	3.5	3.3	3.2	78.5	79.5	77	0.84	0.81	0.71	6	5.0	2.7	3.2	0.001	65	24
90L-2	2.2	2850	4.9	4.6	4.4	81	82.2	80.2	0.85	0.81	0.72	6.1	7.4	2.9	3.1	0.001	69	27
100L-2	3	2860	6.3	6.0	5.8	82.6	83.5	82.1	0.87	0.85	0.75	6.9	10.0	3	3.5	0.004	72	38
112M1-2	4	2870	8.2	7.8	7.5	84.2	85.5	84.5	0.88	0.88	0.81	6.7	13.3	2.5	3.1	0.006	74	45
112M2-2	5.5	2890	11.3	10.7	10.3	84.2	86.9	86.3	0.88	0.88	0.81	7.4	18.2	2.6	3.3	0.007	78	50
132S1-2	5.5	2900	11.1	10.5	10.1	85.7	87.1	85.3	0.88	0.84	0.76	7.4	18.1	2.5	3.3	0.011	83	68
132S2-2	7.5	2915	14.9	14.1	13.6	87	87.3	85.1	0.88	0.87	0.78	7.6	24.6	2.4	3.2	0.013	83	75
132M-2	11	2915	21.8	20.7	20.0	87	88.2	87.1	0.88	0.88	0.81	7.2	36.0	2.4	3.3	0.028	83	87
160M1-2	11	2930	21.2	20.2	19.5	88.4	89.3	88.1	0.89	0.88	0.82	7.3	35.9	2.3	2.6	0.039	83	125
160M2-2	15	2930	28.6	27.2	26.2	89.4	88.9	84.4	0.89	0.89	0.84	7.2	48.9	2.3	2.6	0.044	83	135
160L-2	18.5	2935	34.7	33.0	31.8	90	91.1	89.7	0.9	0.9	0.83	7.3	60.2	2.2	2.7	0.057	84	155
180M-2	22	2940	41.0	39.0	37.6	90.5	88.5	86.5	0.9	0.87	0.82	7	71.5	2.4	3	0.077	84	180
200L1-2	30	2950	55.4	52.6	50.7	91.4	90.2	88	0.9	0.88	0.82	5.9	97.1	1.9	3	0.125	86	265
200L2-2	37	2955	67.9	64.5	62.2	92	92	90.5	0.9	0.86	0.79	6.5	119.6	2.3	3.3	0.140	88	285
225M-2	45	2960	82.1	78.0	75.2	92.5	91.9	89.5	0.9	0.88	0.85	7.1	145.2	2.4	3.3	0.230	90	340
250M1-2	55	2965	99.8	94.8	91.4	93	92.2	89.8	0.9	0.87	0.81	8	177.2	2.7	3.1	0.320	90	435
250M2-2	75	2965	136.1	129.3	124.7	93	93.9	92.5	0.9	0.89	0.82	6.8	241.6	2.2	3.2	0.412	90	520
280S-2	75	2965	135.3	128.5	123.9	93.6	92.5	90.1	0.9	0.89	0.84	6.8	241.6	2.2	3.2	0.595	90	540
280M1-2	90	2970	160.0	152.0	146.5	93.9	92.9	91	0.91	0.89	0.87	7.2	289.4	2.2	3	0.678	90	580
280M2-2	110	2970	195.6	185.8	179.1	93.9	94.3	93.1	0.91	0.92	0.91	6.8	353.7	2.6	3.1	0.860	88	635
315S-2	110	2975	195.4	185.6	178.9	94	93.6	91.7	0.91	0.89	0.82	6.1	353.1	2.3	2.6	1.170	90	1080
315M-2	132	2980	233.2	221.6	213.6	94.5	94.5	93.1	0.91	0.92	0.9	7.1	423.0	2.3	2.8	1.550	90	1175
315L1-2	160	2980	279.3	265.4	255.8	94.6	94.7	93.2	0.92	0.91	0.88	7.4	512.8	2.5	2.7	1.750	91	1300
315L2-2	200	2980	348.4	331.0	319.0	94.8	94.9	94.1	0.92	0.91	0.88	7.3	640.9	2.7	3	2.050	91	1300
355M-2	250	2985	433.7	412.0	397.1	95.2	94.5	92.5	0.92	0.92	0.89	7.1	799.8	1.8	2.6	3.560	93	1840
355L-2	315	2985	545.3	518.0	499.3	95.4	95.2	93.8	0.92	0.93	0.91	6.3	1007.8	1.7	2.9	4.120	94	1950

- Tn=Rated Torque
- IST=Locked Rotor Current
- TST=Locked Rotor Torque
- TM=Maxium Torque
- In=Rated Current

2POLES –3000 RPM SYNCHRONOUS SPEED 50Hz IE3

型号	功率 (kW)	额定转速 (r/min)	额定 380V(A)	额定 400V(A)	额定 415V(A)	效 率			功率因数			堵转电流/额定电流	额定转矩 (N.m)	堵转转矩/额定转矩	最大转矩/额定转矩	惯 量 (kg.m²)	噪音 dB(A)	重量 (kg)
Type	output (kW)	Speed (r/min)	Rated Current			Efficiency		%FL	Power factor		%FL	Ist/In	Tn (N.m)	Tst/Tn	Tmax/Tn	J (kg.m²)	Noise dB(A)	Weight (kg)
			380V(A)	400V(A)	415V(A)	100	75	50	100	75	50							
RYJ2-80M1-2	0.75	2855	1.7	1.7	1.6	80.7	80.5	80.0	0.81	0.77	0.75	6.8	2.5	2.3	2.3	0.001	67	19
RYJ2-80M2-2	1.1	2860	2.5	2.3	2.3	82.7	82.5	82.1	0.82	0.8	0.76	7.3	3.7	2.3	2.3	0.0013	67	22
RYJ2-90S-2	1.5	2865	3.2	3.1	3.0	84.2	84.0	83.8	0.84	0.82	0.81	7.6	5.0	2.3	2.3	0.0024	72	30
RYJ2-90L-2	2.2	2870	4.6	4.3	4.2	85.9	85.5	85.2	0.85	0.84	0.83	7.8	7.3	2.3	2.3	0.0028	72	34
RYJ2-100L-2	3	2890	6.2	5.8	5.6	87.1	87.5	87.0	0.85	0.83	0.82	8.1	9.9	2.3	2.3	0.0074	76	41
RYJ2-112M-2	4	2900	8.1	7.7	7.4	88.1	87.8	87.7	0.85	0.83	0.79	8.3	13.2	2.3	2.3	0.0085	77	43
RYJ2-132S1-2	5.5	2910	10.8	10.2	9.9	89.2	88.9	88.6	0.87	0.86	0.83	8.0	18.0	2.2	2.3	0.0209	80	65
RYJ2-132S2-2	7.5	2910	14.5	13.8	13.3	90.1	89.8	89.0	0.87	0.85	0.84	7.8	24.6	2.2	2.3	0.0285	80	72
RYJ2-160M1-2	11	2930	21.1	20.0	19.3	91.2	91.0	90.7	0.87	0.85	0.84	7.9	35.9	2.2	2.3	0.0536	86	128
RYJ2-160M2-2	15	2930	28.5	27.1	26.1	91.9	91.3	91.2	0.87	0.85	0.84	8.0	48.9	2.2	2.3	0.058	86	138
RYJ2-160L-2	18.5	2935	35.0	33.2	32.0	92.4	91.8	91.5	0.87	0.85	0.83	8.1	60.2	2.2	2.3	0.0674	86	154
RYJ2-180M-2	22	2940	41.4	39.4	38.0	92.7	92.3	92.2	0.87	0.84	0.82	8.2	71.5	2.2	2.3	0.1505	89	187
RYJ2-200L1-2	30	2950	56.2	53.3	51.4	93.3	92.9	92.6	0.87	0.86	0.84	7.5	97.1	2.2	2.3	0.2064	92	267
RYJ2-200L2-2	37	2950	69.0	65.5	63.1	93.7	93.2	93.0	0.87	0.85	0.82	7.5	119.8	2.2	2.3	0.2249	92	279
RYJ2-225M-2	45	2970	83.6	79.4	76.6	94	93.8	93.5	0.87	0.84	0.83	7.6	144.7	2.2	2.3	0.52	92	385
RYJ2-250M-2	55	2975	100.7	95.7	92.2	94.3	94.1	93.7	0.88	0.85	0.81	7.6	176.6	2.2	2.3	0.5554	93	431
RYJ2-280S-2	75	2975	139.9	132.9	128.1	94.7	94.5	94.2	0.86	0.85	0.83	6.9	240.8	2.0	2.3	1.25	94	581
RYJ2-280M-2	90	2975	163.6	155.4	149.8	95	94.6	94.3	0.88	0.87	0.82	7.0	288.9	2.0	2.3	1.42	94	633
RYJ2-315S-2	110	2980	197.3	187.4	180.6	95.2	94.8	94.2	0.89	0.85	0.79	7.1	352.5	2.0	2.2	1.53	96	903
RYJ2-315M-2	132	2980	236.2	224.4	216.3	95.4	95.3	95.1	0.89	0.87	0.84	7.1	423.0	2.0	2.2	1.78	96	1017
RYJ2-315L1-2	160	2980	282.5	268.4	258.7	95.6	95.3	95.2	0.90	0.85	0.82	7.1	512.8	2.0	2.2	2.16	99	1136
RYJ2-315L2-2	200	2980	352.4	334.8	322.7	95.8	95.6	95.4	0.90	0.87	0.83	7.1	640.9	2.0	2.2	4.54	99	1277
RYJ2-355M-2	250	2980	440.6	418.5	403.4	95.8	95.6	95.4	0.90	0.86	0.82	7.1	801.2	2.0	2.2	6.31	103	1637
RYJ2-355L-2	315	2980	555.1	527.3	508.3	95.8	95.6	95.4	0.90	0.88	0.85	7.1	1009.5	2.0	2.2	6.97	103	1790

- Tn=Rated Torque
- IST=Locked Rotor Current
- TST=Locked Rotor Torque
- TM=Maxium Torque
- In=Rated Current

4 POLES – 50Hz 1500 RPM SYNCHRONOUS SPEED EFF2

型号	功率 (kW)	额定转速 (r/min)	额定 380V(A)	额定 400V(A)	额定 415V(A)	效率			功率因数			堵转电流/额定电流	额定转矩 (N.m)	堵转转矩/额定转矩	最大转矩/额定转矩	惯量 (kg.m²)	噪音 dB(A)	重量 (kg)
Type	output (kW)	Speed (r/min)	Rated Current			Efficiency %FL			Power factor %FL			Ist/In	Tn (N.m)	Tst/Tn	Tmax/Tn	J (kg.m²)	Noise dB(A)	Weight (kg)
			380V(A)	400V(A)	415V(A)	100	75	50	100	75	50							
80M1–4	0.55	1410	1.6	1.5	1.4	71	72.5	70.1	0.75	0.67	0.55	4.6	3.7	2.4	2.7	0.002	54	17
80M2–4	0.75	1415	2.1	2.0	1.9	73	72.9	69.5	0.76	0.66	0.54	4.4	5.1	2.2	2.7	0.002	57	18
90S–4	1.1	1405	2.8	2.7	2.6	76.2	76.6	75	0.77	0.68	0.55	4.3	7.5	2.2	3	0.002	61	24
90L–4	1.5	1410	3.7	3.5	3.4	78.5	79	78.5	0.79	0.71	0.58	4.7	10.2	2.5	3	0.003	61	26
100L1–4	2.2	1415	5.1	4.8	4.7	81	80.8	79.5	0.81	0.73	0.59	5.3	14.8	2.5	2.9	0.007	61	33
100L2–4	3	1420	6.7	6.4	6.2	82.6	82.7	81.5	0.82	0.75	0.63	5.7	20.2	2.4	3	0.007	63	37
112M–4	4	1440	8.8	8.4	8.1	84.2	83.9	81.7	0.82	0.77	0.69	5.7	26.5	2.7	3.1	0.010	67	47
132S–4	5.5	1450	11.7	11.2	10.8	85.7	87.1	85.6	0.83	0.77	0.65	6.8	36.2	2.3	3.1	0.022	68	70
132M1–4	7.5	1450	15.6	14.8	14.3	87	88.7	88.3	0.84	0.82	0.72	7.2	49.4	2.6	3.1	0.030	68	80
132M2–4	11	1450	22.9	21.7	20.9	87	88.6	88	0.84	0.8	0.72	6.2	72.4	2.2	2.8	0.063	69	88
160M–4	11	1460	22.5	21.4	20.6	88.4	87.8	85.1	0.84	0.82	0.76	6.8	72.0	2.3	2.8	0.075	70	128
160L–4	15	1460	30.0	28.5	27.5	89.4	89.5	84	0.85	0.8	0.74	7.4	98.1	2.6	3.4	0.093	73	148
180M–4	18.5	1465	36.3	34.5	33.3	90	90.5	88.6	0.86	0.83	0.73	7	120.6	2.1	3.2	0.140	75	175
180L–4	22	1470	42.9	40.8	39.3	90.5	91	89.3	0.86	0.85	0.76	6.8	142.9	2.1	3	0.159	75	185
200L–4	30	1475	58.0	55.1	53.1	91.4	92.3	91.2	0.86	0.87	0.81	6.5	194.2	2.2	3	0.265	80	275
225S–4	37	1475	70.2	66.7	64.3	92	92.2	91.1	0.87	0.87	0.77	7	239.6	2.1	3.2	0.404	81	323
225M–4	45	1475	85.0	80.7	77.8	92.5	92.5	91.3	0.87	0.86	0.8	6.6	291.4	2.2	2.8	0.470	82	345
RYR–250M1–4	55	1480	103.3	98.1	94.6	93	92.6	91	0.87	0.84	0.78	6.3	354.9	2.2	2.7	0.670	82	423
RYR–250M2–4	75	1480	140.8	133.8	129.0	93	93.9	91.9	0.87	0.87	0.83	6.3	484.0	2.2	3.2	0.880	82	550
280S–4	75	1480	139.9	132.9	128.1	93.6	93.6	92	0.87	0.86	0.81	6.3	484.0	2.3	2.8	1.120	84	574
280M1–4	90	1485	167.4	159.0	153.3	93.9	94	92.9	0.87	0.87	0.81	7.1	578.8	2.6	3	1.460	84	630
280M2–4	110	1480	204.6	194.4	187.3	93.9	94.3	93.1	0.87	0.88	0.83	6.2	709.8	2.4	2.8	2.680	85	750
315S–4	110	1485	201.0	190.9	184.0	94.5	94.4	93.8	0.88	0.88	0.84	5.8	707.4	2.1	2.8	3.100	88	1105
315M–4	132	1485	240.4	228.4	220.1	94.8	94.6	93	0.88	0.87	0.82	6.3	848.9	2.2	2.6	3.300	88	1235
315L1–4	160	1489	287.8	273.4	263.6	94.9	95	94	0.89	0.86	0.81	5.7	1026.2	2	2.6	3.790	87	1330
315L2–4	200	1489	359.8	341.8	329.4	94.9	94.9	94	0.89	0.86	0.81	6.2	1282.7	2.3	2.7	4.500	89	1360
355M–4	250	1490	443.3	421.2	405.9	95.2	94.7	93.2	0.9	0.89	0.85	6.5	1602.3	2.1	3.1	5.670	90	1900
355L–4	315	1490	558.6	530.7	511.5	95.2	94.8	94.3	0.9	0.89	0.88	6	2019.0	2.1	3.3	6.660	90	2050

- Tn=Rated Torque
- IST=Locked Rotor Current
- TST=Locked Rotor Torque
- TM=Maxium Torque
- In=Rated Current

4 POLES –1500 RPM SYNCHRONOUS SPEED 50Hz IE2

型号	功率 (kW)	额定转速 (r/min)	额定 380V(A)	额定 400V(A)	额定 415V(A)	效 率			功率因数			堵转电流 /额定电流	额定转矩 (N.m)	堵转转矩 /额定转矩	最大转矩 /额定转矩	惯 量 (kg.m²)	噪音 dB(A)	重量 (kg)
Type	output (kW)	Speed (r/min)	Rated Current			Efficiency %FL			Power factor %FL			Ist/In	Tn (N.m)	Tst/Tn	Tmax/Tn	J (kg.m²)	Noise dB(A)	Weight (kg)
			380V(A)	400V(A)	415V(A)	100	75	50	100	75	50							
802–4	0.75	1425	1.93	1.84	1.77	79.6	79.5	77.3	0.74	0.69	0.56	6.5	5.0	2.3	2.3	0.0036	58	23
90S–4	1.1	1420	2.74	2.60	2.51	81.4	82.4	80.8	0.75	0.76	0.67	6.6	7.4	2.3	2.3	0.0044	60	27.5
90L–4	1.5	1425	3.7	3.5	3.4	82.8	83.8	83.2	0.75	0.76	0.66	6.9	10.1	2.3	2.3	0.0056	60	32
100L1–4	2.2	1440	5.0	4.8	4.6	84.3	84.1	83.5	0.79	0.78	0.67	7.5	14.6	2.3	2.3	0.0109	63	40.5
100L2–4	3	1445	6.7	6.4	6.2	85.5	85.4	84.4	0.79	0.79	0.69	7.6	19.8	2.3	2.3	0.0144	61	46.5
112M–4	4	1440	8.9	8.4	8.1	86.6	86.1	85.8	0.79	0.79	0.69	7.7	26.5	2.3	2.3	0.0171	63	50
132S–4	5.5	1450	11.9	11.3	10.9	87.7	87.3	86.9	0.80	0.79	0.7	7.5	36.2	2.0	2.3	0.0385	69	70
132M–4	7.5	1455	15.9	15.1	14.5	88.7	88.2	88.0	0.81	0.83	0.74	7.4	49.2	2.2	2.3	0.0514	69	85
160M–4	11	1465	23.0	21.8	21.0	89.8	89.6	88.9	0.81	0.8	0.7	7.5	71.7	2.2	2.3	0.1076	70	126
160L–4	15	1465	30.3	28.8	27.8	90.6	90.4	89.9	0.83	0.82	0.73	7.5	97.8	2.2	2.3	0.139	73	147
180M–4	18.5	1470	36.7	34.9	33.6	91.2	90.9	90.7	0.84	0.83	0.74	7.7	120.2	2.2	2.3	0.1913	75	189
180L–4	22	1475	43.4	41.3	39.8	91.6	91.7	91.0	0.84	0.82	0.73	7.8	142.4	2.2	2.3	0.2192	75	208
200L–4	30	1475	58.1	55.2	53.2	92.3	92.5	92.0	0.85	0.84	0.76	7.2	194.2	2.2	2.3	0.3187	80	275
225S–4	37	1480	71.3	67.8	65.3	92.7	92.6	91.6	0.85	0.84	0.76	7.3	238.8	2.2	2.3	0.6463	81	344
225M–4	45	1485	86.4	82.1	79.1	93.1	92.9	91.8	0.85	0.83	0.74	7.4	289.4	2.2	2.3	0.7547	82	375
250M–4	55	1480	105.1	99.9	96.3	93.5	93.4	92.5	0.85	0.84	0.76	7.4	354.9	2.2	2.3	0.9344	83	433
280S–4	75	1485	139.3	132.4	127.6	94	93.8	92.8	0.87	0.85	0.77	6.7	482.3	2.2	2.3	1.7867	86	587
280M–4	90	1490	166.9	158.5	152.8	94.2	94.0	93.1	0.87	0.85	0.77	6.9	576.8	2.2	2.3	2.1229	86	676
315S–4	110	1490	203.3	193.1	186.1	94.5	94.2	93.2	0.87	0.88	0.83	6.9	705.0	2.2	2.2	3.8188	93	946
315M–4	132	1485	243.4	231.3	222.9	94.7	94.6		0.87	0.88	0.84	6.9	848.9	2.2	2.2	3.8306	93	1042
315L1–4	160	1485	291.1	276.5	266.5	94.9	94.9	94.2	0.88	0.9	0.87	6.9	1029.0	2.2	2.2	4.6727	97	1130
315L2–4	200	1485	363.1	345.0	332.5	95.1	95.2	94.7	0.88	0.9	0.88	6.9	1286.2	2.2	2.2	5.3463	97	1243
355M–4	250	1490	448.8	426.3	410.9	95.1	94.9	94.1	0.89	0.9	0.87	6.9	1602.3	2.2	2.2	8.2188	101	1661
355L–4	315	1490	565.5	537.2	517.8	95.1	94.9	94.1	0.89	0.9	0.86	6.9	2019.0	2.2	2.2	10.5146	101	1924

- Tn=Rated Torque
- IST=Locked Rotor Current
- TST=Locked Rotor Torque
- TM=Maxium Torque
- In=Rated Current

4 POLES –1500 RPM SYNCHRONOUS SPEED 50Hz IE3

型号	功率 (kW)	额定转速 (r/min)	额定 380V(A)	额定 400V(A)	额定 415V(A)	效 率			功率因数			堵转电流 /额定电流	额定转矩 (N.m)	堵转转矩 /额定转矩	最大转矩 /额定转矩	惯 量 (kg.m²)	噪音 dB(A)	重量 (kg)
Type	output (kW)	Speed (r/min)	Rated Current			Efficiency %FL			Power factor %FL			Ist/In	Tn (N.m)	Tst/Tn	Tmax/Tn	J (kg.m²)	Noise dB(A)	Weight (kg)
			380V(A)	400V(A)	415V(A)	100	75	50	100	75	50							
RYJ2-80M2-4	0.75	1420	1.87	1.77	1.71	82.5	82.4	82.1	0.74	0.69	0.56	6.5	5.0	2.3	2.3	0.0035	58	25
RYJ2-90S-4	1.1	1425	2.65	2.52	2.43	84.1	83.9	82.8	0.75	0.76	0.67	6.6	7.4	2.3	2.3	0.0046	61	29
RYJ2-90L-4	1.5	1425	3.6	3.4	3.3	85.3	85.0	84.5	0.75	0.76	0.66	6.9	10.1	2.3	2.3	0.005	61	34
RYJ2-100L1-4	2.2	1440	4.9	4.6	4.5	86.7	86.5	85.9	0.79	0.78	0.67	7.5	14.6	2.3	2.3	0.0105	64	43
RYJ2-100L2-4	3	1440	6.6	6.3	6.0	87.7	87.2	86.7	0.79	0.79	0.69	7.6	19.9	2.3	2.3	0.0146	64	49
RYJ2-112M-4	4	1440	8.7	8.2	8.0	88.6	88.9	87.4	0.79	0.79	0.69	7.7	26.5	2.3	2.3	0.0188	65	53
RYJ2-132S-4	5.5	1450	11.7	11.1	10.7	89.6	89.7	88.5	0.80	0.79	0.7	7.5	36.2	2.0	2.3	0.0543	71	73
RYJ2-132M-4	7.5	1450	15.6	14.8	14.2	90.4	90.5	89.0	0.81	0.83	0.74	7.4	49.4	2.2	2.3	0.065	71	88
RYJ2-160M-4	11	1465	22.6	21.4	20.7	91.4	91.3	91.1	0.81	0.8	0.7	7.5	71.7	2.2	2.3	0.11	75	129
RYJ2-160L-4	15	1470	29.8	28.3	27.3	92.1	91.2	89.7	0.83	0.82	0.73	7.5	97.4	2.2	2.3	0.1306	75	150
RYJ2-180M-4	18.5	1470	36.1	34.3	33.1	92.6	92.3	92.1	0.84	0.83	0.74	7.7	120.2	2.2	2.3	0.179	76	194
RYJ2-180L-4	22	1475	42.8	40.6	39.2	93	93.5	92.9	0.84	0.82	0.73	7.8	142.4	2.2	2.3	0.246	76	213
RYJ2-200L-4	30	1475	57.3	54.4	52.5	93.6	93.7	93.1	0.85	0.84	0.76	7.2	194.2	2.2	2.3	0.3865	79	280
RYJ2-225S-4	37	1480	70.4	66.9	64.5	93.9	93.7	93.6	0.85	0.84	0.76	7.3	238.8	2.2	2.3	0.7004	81	349
RYJ2-225M-4	45	1485	85.4	81.1	78.2	94.2	94.8	93.9	0.85	0.83	0.74	7.4	289.4	2.2	2.3	0.8412	81	380
RYJ2-250M-4	55	1485	103.9	98.7	95.2	94.6	95.0	94.9	0.85	0.84	0.76	7.4	353.7	2.2	2.3	1.16	83	438
RYJ2-280S-4	75	1485	137.9	131.0	126.2	95	95.5	94.5	0.87	0.85	0.77	6.4	82.3	2.2	2.3	2.18	86	595
RYJ2-280M-4	90	1485	165.1	156.8	151.2	95.2	95.7	95.0	0.87	0.85	0.77	6.9	578.8	2.2	2.3	2.79	86	684
RYJ2-315S-4	110	1485	201.4	191.3	184.4	95.4	96.0	95.0	0.87	0.88	0.83	6.9	707.4	2.2	2.2	3.25	93	954
RYJ2-315M-4	132	1490	241.1	229.1	220.8	95.6	96.3	95.6	0.87	0.88	0.84	6.9	846.0	2.2	2.2	3.78	93	1050
RYJ2-315L1-4	160	1490	288.4	273.9	264.0	95.8	96.3	95.7	0.88	0.9	0.87	6.9	1025.5	2.2	2.2	3.79	97	1138
RYJ2-315L2-4	200	1490	359.7	341.7	329.4	96	95.9	95.4	0.88	0.9	0.88	6.9	1281.9	2.2	2.2	6.95	97	1241
RYJ2-355M-4	250	1490	444.6	422.3	407.1	96	96.6	95.8	0.89	0.9	0.87	6.9	1602.3	2.2	2.2	8.44	101	1671
RYJ2-355L-4	315	1490	560.2	532.2	512.9	96	96.4	95.8	0.89	0.9	0.86	6.9	2019.0	2.2	2.2	11.3	101	1934

- Tn=Rated Torque
- IST=Locked Rotor Current
- TST=Locked Rotor Torque
- TM=Maxium Torque
- In=Rated Current

6 POLES – 50Hz 1000 RPM SYNCHRONOUS SPEED EFF2

型号	功率 (kW)	额定转速 (r/min)	额定 380V(A)	额定 400V(A)	额定 415V(A)	效 率			功率因数			堵转电流/额定电流	额定转矩 (N.m)	堵转转矩/额定转矩	最大转矩/额定转矩	惯 量 (kg.m²)	噪音 dB(A)	重量 (kg)
Type	output (kW)	Speed (r/min)	Rated Current			Efficiency %FL			Power factor %FL			Ist/In	Tn (N.m)	Tst/Tn	Tmax/Tn	J (kg.m²)	Noise dB(A)	Weight (kg)
			380V(A)	400V(A)	415V(A)	100	75	50	100	75	50							
80M1-6	0.37	915	1.3	1.2	1.2	62	63.2	55.5	0.7	0.63	0.52	3.2	3.9	1.8	2	0.002	46	17
80M2-6	0.55	915	1.8	1.7	1.6	65	70	65.2	0.72	0.62	0.52	3.3	5.7	2	2.2	0.003	50	20
90S-6	0.75	920	2.3	2.2	2.1	69	71.6	67.8	0.72	0.74	0.54	3.6	7.8	2.3	2.6	0.003	53	23
90L-6	1.1	925	3.2	3.0	2.9	72	73.5	70.4	0.73	0.65	0.52	3.5	11.4	2.1	2.5	0.004	59	26
100L-6	1.5	925	4.0	3.8	3.7	76	75.8	72.4	0.75	0.66	0.54	4.3	15.5	2.3	2.9	0.007	62	35
112M-6	2.2	935	5.6	5.3	5.1	79	78.1	75.9	0.76	0.74	0.6	4.4	22.5	2.2	2.5	0.014	65	45
132S-6	3	960	7.4	7.0	6.8	81	82.5	80.1	0.76	0.7	0.57	5.8	29.8	2.1	3	0.029	66	65
132M1-6	4	960	9.8	9.3	8.9	82	83.9	82.4	0.76	0.7	0.57	6.4	39.8	2.1	2.7	0.036	66	70
132M2-6	5.5	960	12.9	12.3	11.8	84	85.3	83.3	0.77	0.74	0.58	6.5	54.7	2	2.5	0.045	67	80
160M-6	7.5	965	17.2	16.3	15.8	86	88.3	87	0.77	0.74	0.67	5.4	74.2	2	2.3	0.088	71	125
160L-6	11	970	24.5	23.3	22.4	87.5	89.1	87.5	0.78	0.77	0.67	5.5	108.3	2	2.3	0.115	72	150
180L-6	15	970	31.6	30.0	28.9	89	89.4	87.9	0.81	0.78	0.66	6.2	147.7	2.1	2.5	0.207	72	185
200L1-6	18.5	975	38.6	36.6	35.3	90	91.5	90.4	0.81	0.76	0.64	6.2	181.2	2	2.8	0.315	73	260
200L2-6	22	975	44.7	42.5	41.0	90	88.9	87.8	0.83	0.81	0.71	5.9	215.5	2	2.5	0.360	73	270
225M-6	30	980	59.3	56.3	54.3	91.5	91.8	90.6	0.84	0.84	0.74	6.4	292.3	2	2.5	0.545	71	340
RYR-250M-6	37	980	71.1	67.5	65.1	92	91.7	90	0.86	0.82	0.75	6.7	360.6	2.3	2.6	0.834	76	430
280S-6	45	980	85.9	81.7	78.7	92.5	92.5	91.7	0.86	0.84	0.76	6.7	438.5	2.1	3	1.390	76	525
280M1-6	55	980	104.7	99.5	95.9	92.8	93	92.2	0.86	0.86	0.81	6.3	536.0	2.1	2.5	1.650	76	580
280M2-6	75	980	142.8	135.6	130.7	92.8	93.6	92.1	0.86	0.86	0.8	6.8	730.9	2.8	2.9	3.210	79	700
315S-6	75	985	141.7	134.6	129.8	93.5	94	93	0.86	0.84	0.81	7	727.2	2	2.7	4.100	80	1060
315M-6	90	985	169.5	161.0	155.2	93.8	94.5	93	0.86	0.84	0.77	6.2	872.6	2	2.4	4.300	80	1170
315L1-6	110	990	206.7	196.4	189.3	94	94.5	93.2	0.86	0.85	0.8	6.7	1061.1	2.4	2.8	5.450	82	1220
315L2-6	132	990	244.7	232.5	224.1	94.2	94.5	93.8	0.87	0.85	0.81	6.8	1273.3	2.3	2.9	6.120	82	1280
355M1-6	160	990	292.3	277.7	267.7	94.5	94.9	93	0.88	0.87	0.85	6.5	1543.4	1.9	2.5	8.850	85	1800
355M2-6	200	990	365.4	347.1	334.6	94.5	95.8	94.2	0.88	0.87	0.81	6.3	1929.3	2	2.5	9.550	85	1900
355L-6	250	990	456.8	433.9	418.2	94.5	95.9	94	0.88	0.88	0.84	6	2411.6	1.9	2.4	10.40	87	2050

- Tn=Rated Torque
- IST=Locked Rotor Current
- TST=Locked Rotor Torque
- TM=Maxium Torque
- In=Rated Current

执行标准 STANDARDS COMPLIANCE

荣佳动力旨在设计符合各种行业的电机，包括户外，热带和零度条件下所使用的。

RONGJIA Power are designed and built to suit all industrial requirements, including operation outside in the weather, in the tropics, or subzero temperatures.

荣佳动力电机符合以下国际标准的要求：

1.国际电工委员会标准–IEC60034 and IEC60072.

2.英国标准 –BS 5000 and BS 4999.

3.澳大利亚标准–AS 1359.

4.按照欧洲"CE"标准的要求，低电压指令73/23（1973）和参考指令93/68（1993）&EMC 89/336所设计的.荣佳电机可配合其他的机械设备使用，但要确保所有的机械设备都符合机械安全指令（89/392/EEC).

RONGJIA Power are built to comply with the requirements of the following international standards:

1.International Electrotechnical Commission–IEC60034 and IEC60072.

2.British Standards–BS 5000 and BS 4999.

3.Australian Standards–AS 1359.

4.The requirements for European "CE" marking, Low Voltage Directive 73/23(1973), modified by Directive 93/68(1993) & the EMC–Directive 89/336.These RONGJIA motors are designed for use with other machineries, and they should only be used if the complete machinery is in conformity with the Directive for Safety of Machinery(89/392/EEC).

标准 STANDARD	IEC	EUROPE CENELEC	BS
IEC60034			
电气设备通用标准 General Requirements for Electrical machines	60034–1	EN60034–1	4999–1 4999–69
判定损失和效率的方法 Methods of Determining Losses & Effiency	60034–2	HD 53 2	4999–34
防护等级 Degrees of Protection	60034–5	EN 60034–5	4999–20
冷却方式 Method of Cooling	60034–6	EN 60034–6	4999–21
安装方式 Mounting arrangements	60034–7	EN 60034–7	4999–22
终端标记和旋转方向 Terminal Markings and Direction of Rotation	60034–8	HD53 8 S4	4999–3
噪音限制 Noise limits	60034–9	EN60034–9	4999–51
启动性能 Starting Performance	60034–12	EN60034–12	4999–112
机械振动 Mechanical vibration	60034–14	EN60034–14	4999–50
标准电压 Standard voltages	60038	HD 472 S1	
尺寸&输出功率 Dimensions & Output ratings	60072		
安装尺寸和机座号及输出功率 Mounting Dimensions & relationship frame sizes–output ratings.	60072	HD 231	4999–10 51–110
轴尺寸 Shaft dimensions	60072	HD 231	4999–10
环境条件等级 Classification of environmental conditions	600721–2–1		
绝缘材料 Insulation material	60085		
效率 Efficiency	60034–30		

6 POLES –1000 RPM SYNCHRONOUS SPEED 50Hz IE3

型号	功率 (kW)	额定转速 (r/min)	额定 380V(A)	额定 400V(A)	额定 415V(A)	效 率			功率因数			堵转电流 /额定电流	额定转矩 (N.m)	堵转转矩 /额定转矩	最大转矩 /额定转矩	惯 量 (kg.m²)	噪音 dB(A)	重量 (kg)
Type	output (kW)	Speed (r/min)	Rated Current			Efficiency %FL			Power factor %FL			Ist/In	Tn (N.m)	Tst/Tn	Tmax/Tn	J (kg.m²)	Noise dB(A)	Weight (kg)
			380V(A)	400V(A)	415V(A)	100	75	50	100	75	50							
RYJ2-90S-6	0.75	945	2.1	2.0	1.9	78.9	78.5	76.0	0.70	0.64	0.58	5.8	7.6	2.1	2.1	0.0055	57	29
RYJ2-90L-6	1.1	945	2.9	2.8	2.7	81	79.7	78.5	0.70	0.62	0.59	5.9	11.1	2.1	2.1	0.007	57	33
RYJ2-100L-6	1.5	955	3.8	3.6	3.5	82.5	83.8	81.0	0.73	0.69	0.58	6.0	15.0	2.1	2.1	0.0128	61	41
RYJ2-112M-6	2.2	955	5.4	5.2	5.0	84.3	84.5	83.0	0.73	0.69	0.56	6.0	22.0	2.0	2.1	0.0225	65	53
RYJ2-132S-6	3	965	7.3	6.9	6.7	85.6	86.9	85.5	0.73	0.7	0.58	6.2	29.7	2.0	2.1	0.0435	69	66
RYJ2-132M1-6	4	965	9.5	9.0	8.7	86.8	85.9	85.6	0.74	0.71	0.60	6.8	39.6	2.0	2.1	0.0521	69	72
RYJ2-132M2-6	5.5	965	12.8	12.2	11.8	88	87.8	87.5	0.74	0.73	0.61	7.1	54.4	2.0	2.1	0.065	69	87
RYJ2-160M-6	7.5	970	17.3	16.4	15.8	89.1	90.1	87.5	0.74	0.73	0.62	6.7	73.8	2.1	2.1	0.1422	73	124
RYJ2-160L-6	11	970	25.0	23.8	22.9	90.3	89.9	89.2	0.74	0.73	0.62	6.9	108.3	2.1	2.1	0.1755	73	156
RYJ2-180L-6	15	980	32.5	30.8	29.7	91.2	90.9	90.1	0.77	0.77	0.67	7.2	146.2	2.0	2.1	0.34	73	199
RYJ2-200L1-6	18.5	980	38.3	36.4	35.1	91.7	91.2	90.8	0.80	0.79	0.70	7.2	180.3	2.1	2.1	0.3812	76	249
RYJ2-200L2-6	22	980	45.3	43.1	41.5	92.2	91.8	91.2	0.80	0.79	0.70	7.3	214.4	2.1	2.1	0.4491	76	278
RYJ2-225M-6	30	985	60.6	57.5	55.5	92.9	92.8	91.7	0.81	0.82	0.76	7.1	290.9	2.0	2.1	0.9856	76	317
RYJ2-250M-6	37	985	71.7	68.1	65.7	93.3	93.1	91.8	0.84	0.83	0.77	7.1	358.7	2.1	2.1	1.35	78	418
RYJ2-280S-6	45	990	86.9	82.5	79.5	93.7	93.5	93.2	0.84	0.83	0.75	7.2	434.1	2.1	2.0	2.47	80	565
RYJ2-280M-6	55	990	105.7	100.4	96.8	94.1	93.7	93.5	0.84	0.83	0.76	7.2	530.6	2.1	2.0	2.65	80	619
RYJ2-315S-6	75	990	143.4	136.2	131.3	94.6	94.4	93.8	0.84	0.82	0.77	6.7	723.5	2.0	2.0	3.49	85	855
RYJ2-315M-6	90	990	171.5	163.0	157.1	94.9	94.5	93.8	0.84	0.82	0.79	6.7	868.2	2.0	2.0	4.12	85	1039
RYJ2-315L1-6	110	990	209.2	198.8	191.6	95.1	94.7	94.2	0.84	0.82	0.79	6.7	1061.1	2.0	2.0	9.31	85	1190
RYJ2-315L2-6	132	990	247.3	235.0	226.5	95.4	94.8	94.2	0.85	0.81	0.80	6.7	1273.3	2.0	2.0	10.5	85	1331
RYJ2-355M1-6	160	990	292.3	277.7	267.6	95.6	95.1	94.9	0.87	0.85	0.82	6.7	1543.4	2.0	2.0	11.4	92	1590
RYJ2-355M2-6	200	990	364.6	346.4	333.8	95.8	96.0	95.4	0.87	0.85	0.83	6.7	1929.3	2.0	2.0	13.5	92	1674
RYJ2-355L-6	250	990	455.7	433.0	417.3	95.8	96.0	95.3	0.87	0.86	0.84	6.7	2411.6	2.0	2.0	14.4	92	1767

- Tn=Rated Torque
- IST=Locked Rotor Current
- TST=Locked Rotor Torque
- TM=Maxium Torque
- In=Rated Current

8 POLES – 50Hz 750 RPM SYNCHRONOUS SPEED EFF2

型号	功率 (kW)	额定转速 (r/min)	额定 380V(A)	额定 400V(A)	额定 415V(A)	效率			功率因数			堵转电流/额定电流	额定转矩 (N.m)	堵转转矩/额定转矩	最大转矩/额定转矩	惯量 (kg.m²)	噪音 dB(A)	重量 (kg)
Type	output (kW)	Speed (r/min)	Rated Current			Efficiency		%FL	Power factor		%FL	Ist/In	Tn (N.m)	Tst/Tn	Tmax/Tn	J (kg.m²)	Noise dB(A)	Weight (kg)
			380V(A)	400V(A)	415V(A)	100	75	50	100	75	50							
80M1-8	0.18	680	0.9	0.8	0.8	51	54	45	0.61	0.55	0.46	3.2	2.5	2.1	2.4	0.002	50	17
80M2-8	0.25	690	1.2	1.1	1.1	54	55.2	45.1	0.61	0.55	0.47	3.3	3.5	2	2.2	0.003	50	19
90S-8	0.37	700	1.5	1.4	1.4	62	64.9	56.2	0.61	0.53	0.44	3.6	5.0	1.9	2.5	0.004	53	23
90L-8	0.55	700	2.2	2.1	2.0	63	67.1	59.3	0.61	0.51	0.42	3.5	7.5	1.9	2.3	0.004	54	25
100L1-8	0.75	700	2.4	2.3	2.2	71	70.2	62.5	0.67	0.57	0.46	4	10.2	2.1	2.4	0.008	56	33
100L2-8	1.1	700	3.3	3.2	3.0	73	74.1	68.8	0.69	0.59	0.47	3.7	15.0	2.2	2.4	0.010	59	38
112M1-8	1.5	700	4.4	4.2	4.0	75	76.8	73.7	0.69	0.6	0.5	4.2	20.5	2.2	2.7	0.017	61	50
112M2-8	2.2	700	6.5	6.1	5.9	75	76.9	73.6	0.69	0.62	0.51	4.5	30.0	2	2.6	0.018	62	55
132S-8	2.2	705	6.0	5.7	5.5	78	80.1	77.5	0.71	0.63	0.51	4.7	29.8	2.1	2.5	0.030	65	58
132M1-8	3	705	7.9	7.5	7.2	79	82.6	79.5	0.73	0.67	0.55	4.6	40.6	2.1	2.6	0.040	65	68
132M2-8	4	706	10.5	10.0	9.6	79	81.6	79.8	0.73	0.69	0.57	4.6	54.1	1.9	2.4	0.040	67	74
160M1-8	4	710	10.3	9.8	9.4	81	81.5	80.3	0.73	0.66	0.56	4.5	53.8	2.1	2.7	0.075	67	113
160M2-8	5.5	715	13.6	12.9	12.5	83	87.1	85.6	0.74	0.67	0.55	5	73.5	2.3	2.8	0.093	68	123
160L-8	7.5	720	17.8	16.9	16.3	85.5	87.4	85.9	0.75	0.69	0.55	6	99.5	2.2	2.6	0.125	69	150
180L-8	11	730	25.1	23.9	23.0	87.5	87.5	85.9	0.76	0.67	0.56	5.5	143.9	2.2	2.5	0.202	70	178
200L-8	15	730	34.1	32.4	31.2	88	89.6	88.2	0.76	0.72	0.59	5.8	196.2	2.1	2.8	0.338	71	233
225S-8	18.5	731	41.1	39.0	37.6	90	89.5	88.8	0.76	0.73	0.65	6.3	241.7	2.1	2.5	0.490	73	283
225M-8	22	735	47.4	45.0	43.4	90.5	90.6	89.9	0.78	0.74	0.63	6.2	285.9	2.2	2.5	0.550	73	323
RYR-250M-8	30	735	63.4	60.2	58.1	91	90.5	88.6	0.79	0.76	0.65	5.9	389.8	2.3	3	0.830	74	400
280S-8	37	735	77.8	73.9	71.2	91.5	91.2	90.1	0.79	0.77	0.69	6.3	480.7	2.1	2.8	1.390	75	515
280M1-8	45	740	94.1	89.4	86.1	92	91.3	89.5	0.79	0.76	0.64	6.4	580.7	1.9	2.5	1.650	76	566
280M2-8	55	740	115.0	109.2	105.3	92	91.6	90.5	0.79	0.77	0.67	6.9	709.8	2.3	2.9	3.650	77	678
315S-8	55	740	111.2	105.6	101.8	92.8	93.2	92.5	0.81	0.78	0.7	6.8	709.8	1.9	2.7	4.790	78	790
315M-8	75	740	151.3	143.7	138.5	93	93.9	91.6	0.81	0.8	0.72	7	967.9	2	2.4	5.580	78	970
315L1-8	90	740	177.8	168.9	162.8	93.8	94	92	0.82	0.76	0.69	6.7	1161.5	2.4	2.8	6.370	80	1060
315L2-8	110	740	216.8	206.0	198.5	94	94.3	92.5	0.82	0.8	0.72	6.4	1419.6	2.4	2.5	7.230	81	1170
355M1-8	132	740	261.0	248.0	239.0	93.7	94.9	93.6	0.82	0.81	0.72	5.8	1703.5	1.7	2.3	10.54	82	1560
355M2-8	160	743	314.7	299.0	288.2	94.2	95.1	94.2	0.82	0.83	0.75	5.5	2056.5	1.5	2.3	11.72	86	1650
355L-8	200	743	387.4	368.1	354.8	94.5	95.5	94.6	0.83	0.86	0.78	6	2570.7	1.3	3.3	12.85	87	1940

- Tn=Rated Torque
- IST=Locked Rotor Current
- TST=Locked Rotor Torque
- TM=Maxium Torque
- In=Rated Current

RYJ、RYJ2 SERIES DIMENSIONS FOOT MOUNT B3 IM1001
RYJ、RYJ2外形及安装尺寸图-B3

80~132

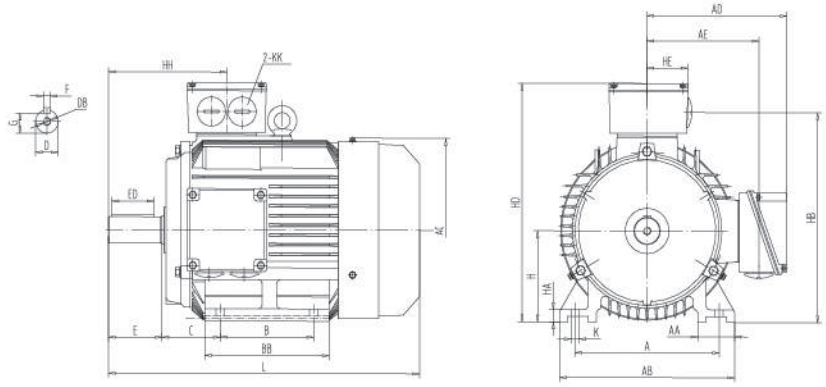

160~200

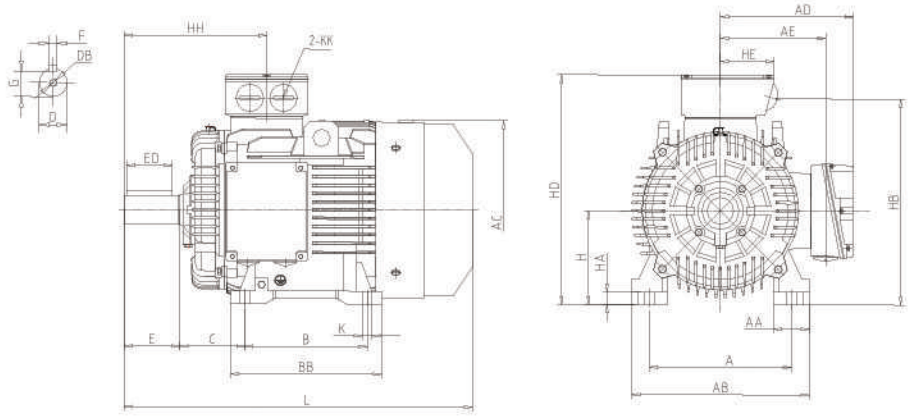

225~280

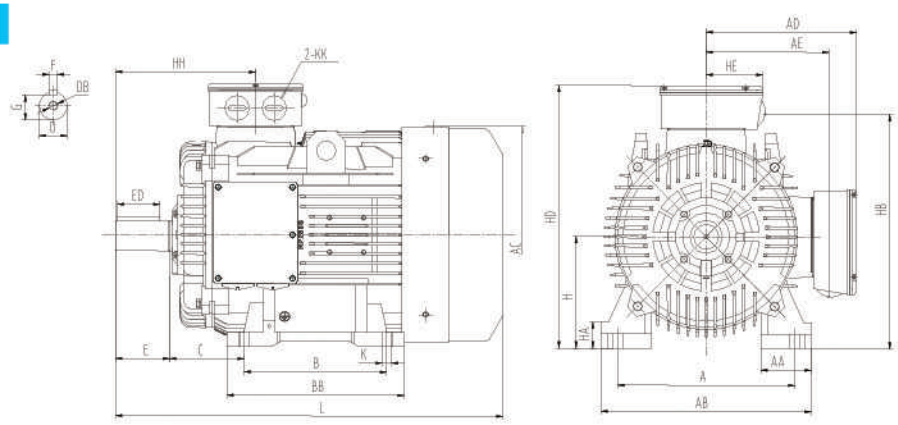

315~355

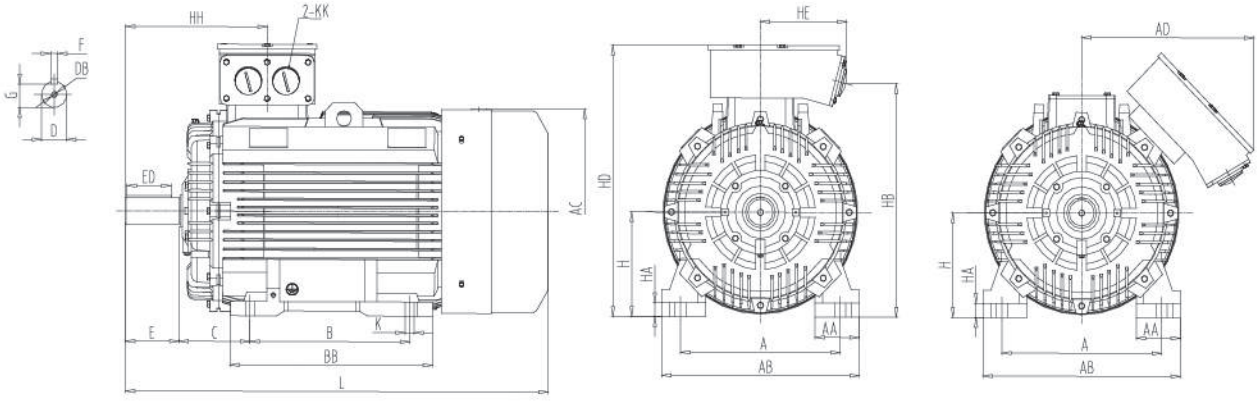

RYJ、RYJ2 SERIES DIMENSIONS FOOT MOUNT B3 IM1001
RYJ、RYJ2外形及安装尺寸图–B3

FRAME	A	AA	AB	AC	AD	AE	B	BB	C	D	DB	E	ED	F	G	H	HA	HB	HD	HE	HH	K	KK	L
80	125	36	165	160	150	112	100	150	50	19	M6X16	40	25	6	16	80	10	192	230	59	112	10	M25X1.5	310
90S	140	38	180	176	155	116	100	180	56	24	M8X19	50	40	8	20	90	12	206	245	59	166	10	M25X1.5	350
90L	140	38	180	176	155	116	125	205	56	24	M8X19	50	40	8	20	90	12	206	245	59	166	10	M25X1.5	375
100L	160	42	200	200	170	130	140	203	63	28	M10X22	60	45	8	24	100	14	230	270	59	143	12	M25X1.5	410
112M	190	45	226	220	198	153	140	180	70	28	M10X22	60	45	8	24	112	13	265	310	59	154	12	M32X1.5	400
132S	216	55	262	260	218	173	140	186	89	38	M12X28	80	63	10	33	132	18	305	350	59	179	12	M32X1.5	470
132M	216	55	262	260	205	164	178	224	89	38	M12X28	80	63	10	33	132	18	305	350	59	179	12	M32X1.5	510
160M	254	65	314	330	270	205	210	268	108	42	M16x36	110	90	12	37	160	20	365	415	95	269	14.5	M40x1.5	625
160L	254	65	314	330	270	205	254	312	108	42	M16x36	110	90	12	37	160	20	365	415	95	269	14.5	M40x1.5	670
180M	279	70	349	380	285	220	241	296	121	48	M16X36	110	90	14	43	180	22	400	450	95	274	15	M40X1.5	700
180L	279	70	349	380	285	220	279	335	121	48	M16X36	110	90	14	43	180	22	400	450	95	274	15	M40X1.5	740
200L	318	72	380	420	325	255	305	366	133	55	M20X42	110	90	16	49	200	23	445	510	165.5	296	19	M50X1.5	780
225S-4,6,8	356	75	431	470	340	270	286	380	149	60	M20X42	140	110	18	53	225	28	507	550	165.5	329	19	M50X1.5	820
225M-2	356	75	431	470	340	270	311	405	149	55	M20X42	110	90	16	49	225	28	507	550	165.5	299	19	M50X1.5	820
225M-4,6,8	356	75	431	470	340	270	311	405	149	60	M20X42	140	110	18	53	225	28	507	550	165.5	329	19	M50X1.5	850
250M-2	406	110	480	510	365	290	349	440	168	60	M20X42	140	110	18	53	250	38	560	620	185	355	24	M63X1.5	945
250M-4,6,8	406	110	480	510	365	290	349	440	168	65	M20X42	140	110	18	58	250	38	560	620	185	355	24	M63X1.5	945
280S-2	457	130	542	580	391	320	368	458	190	65	M20X42	140	110	18	58	280	33	600	670	146	359	24	M63X1.5	1020
280S-4,6,8	457	130	542	580	391	320	368	458	190	75	M20X42	140	110	20	68	280	33	600	670	146	359	24	M63X1.5	1020
280M-2	457	130	542	580	391	320	419	509	190	65	M20X42	140	110	18	58	280	33	600	670	146	359	24	M63X1.5	1070
280M-4,6,8	457	130	542	580	391	320	419	509	190	75	M20X42	140	110	20	68	280	33	600	670	146	359	24	M63X1.5	1070
315S-2	508	140	628	645	560	440	406	595	216	65	M20x42	140	110	18	58	315	43	745	840	275	415	28	M63X1.5	1200
315S-4,6,8	508	140	628	645	560	440	406	595	216	80	M20x42	170	140	22	71	315	43	745	840	275	445	28	M63X1.5	1230
315M-2	508	140	628	645	560	440	457	645	216	65	M20x42	140	110	18	58	315	43	745	840	275	415	28	M63X1.5	1310
315M- 4,6,8	508	140	628	645	560	440	457	645	216	80	M20x42	170	140	22	71	315	43	745	840	275	445	28	M63X1.5	1340
315L-2	508	140	628	645	560	440	508	645	216	65	M20x42	140	110	18	58	315	43	745	840	275	415	28	M63X1.5	1310
315L-4,6,8	508	140	628	645	560	440	508	645	216	80	M20x42	170	140	22	71	315	43	745	840	275	445	28	M63X1.5	1340
355M-2	610	150	740	720	710	483	560	805	254	75	M24x50	140	110	20	68	355	55	838	1060	447	419	28	M63X1.5	1650
355M-4,6,8	610	150	740	720	710	483	560	805	254	95	M24x50	170	140	25	86	355	55	838	1060	447	449	28	M63X1.5	1680
355L-2	610	150	740	720	710	483	630	805	254	75	M24x50	140	110	20	68	355	55	838	1060	447	419	28	M63X1.5	1650
355L-4,6,8	610	150	740	720	710	483	630	805	254	95	M24x50	170	140	25	86	355	55	838	1060	447	449	28	M63X1.5	1680

RYJ、RYJ2 SERIES DIMENSIONS FLANGE MOUNT B5 IM3001
RYJ、RYJ2外形及安装尺寸图-B5-V1

80~132

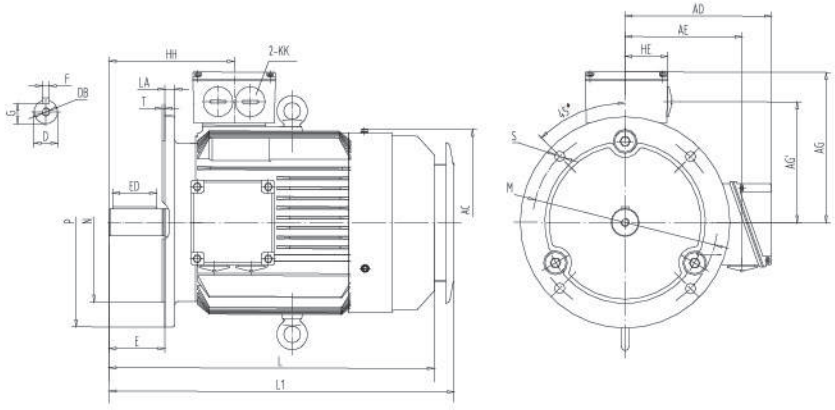

160~200

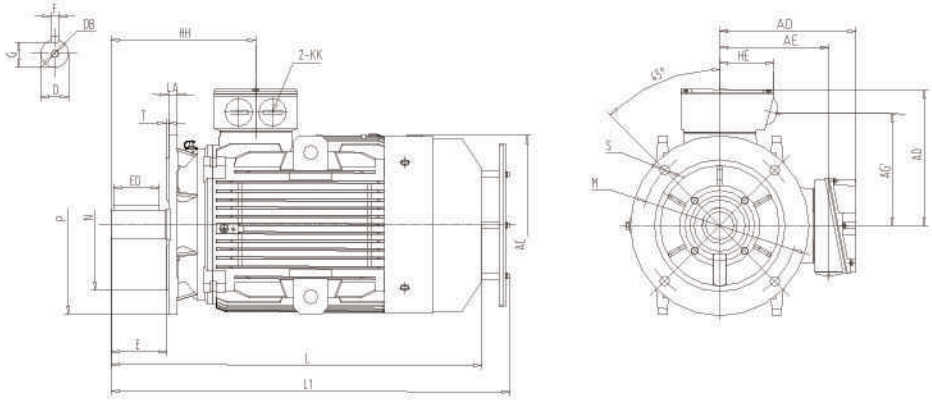

225~280

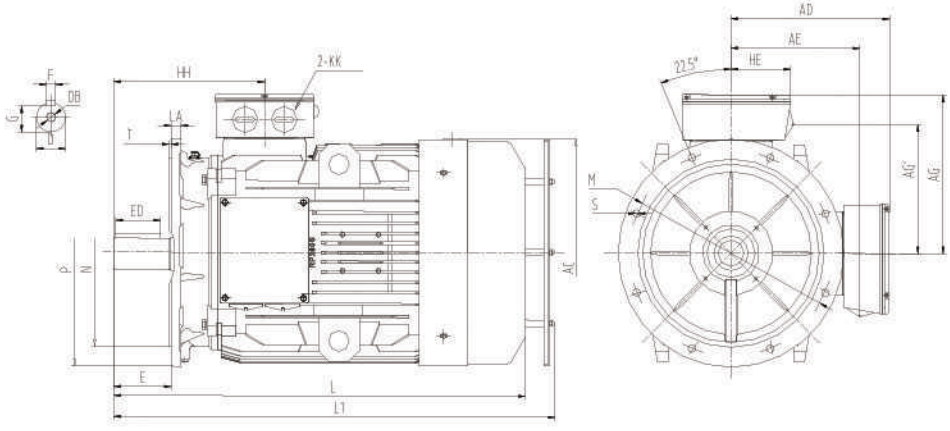

315~355

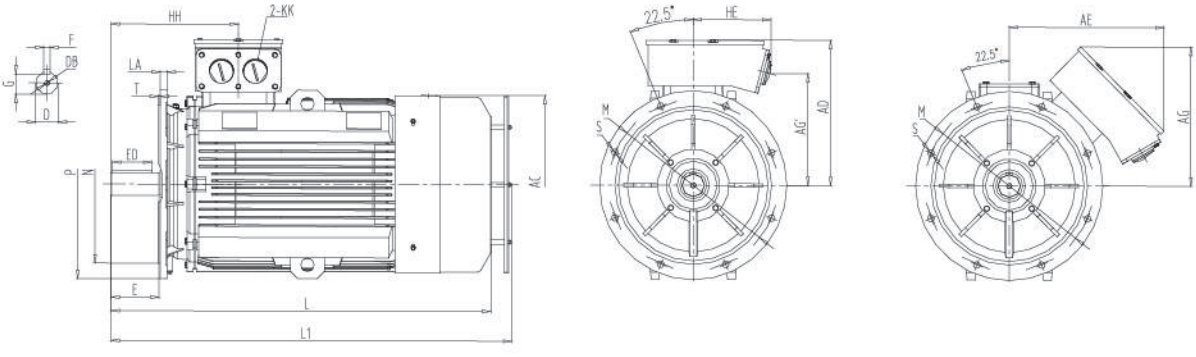

RYJ、RYJ2 SERIES DIMENSIONS FLANGE MOUNT B5 IM3001
RYJ、RYJ2外形及安装尺寸图–B5–V1

FRAME	AC	AD	AG	AG'	D	DB	E	ED	F	G	HE	HH	KK	L1	L	LA	M	N	P	S	T
80	175	150	150	112	19	M6X16	40	25	6	15.5	59	112	M25X1.5	310	310	12	165	130	200	4×12	3.5
90S	195	155	155	116	24	M8X19	50	40	8	20	59	166	M25X1.5	375	350	12	165	130	200	4×12	3.5
90L	195	155	155	116	24	M8X19	50	40	8	20	59	166	M25X1.5	400	375	12	165	130	200	4×12	3.5
100L	215	170	170	130	28	M10X22	60	45	8	24	59	143	M25X1.5	43.5	410	15	215	180	250	4×14.5	4
112M	220	198	198	162	28	M10X22	60	45	8	24	59	154	M32X1.5	465	400	14	215	180	250	4×14.5	4
132S	260	218	218	182	38	M12X28	80	63	10	33	59	179	M32X1.5	535	470	14	265	230	300	4×14.5	4
132M	260	218	218	182	38	M12X28	80	63	10	33	59	179	M32X1.5	575	510	14	265	230	300	4×14.5	4
160M	330	260	255	215	42	M16x36	110	90	12	37	95	269	M40x1.5	695	625	15	300	250	350	4×18.5	5
160L	330	260	255	215	42	M16x36	110	90	12	37	95	269	M40x1.5	740	670	15	300	250	350	4×18.5	5
180M	380	275	270	225	48	M16X36	110	90	14	42.5	95	274	M40X1.5	785	700	18	300	250	350	4×18.5	5
180L	380	275	270	225	48	M16X36	110	90	14	42.5	95	274	M40X1.5	820	740	18	300	250	350	4×18.5	5
200L	420	325	310	254	55	M20X42	110	90	16	49	165.5	296	M50X1.5	865	780	18	350	300	400	4×18.5	5
225S-4,6,8	470	340	325	282	60	M20X42	140	110	18	53	165.5	329	M50X1.5	900	820	20	400	350	450	8×18.5	5
225M-2	470	340	325	282	55	M20X42	110	90	16	49	165.5	299	M50X1.5	900	820	20	400	350	450	8×18.5	5
225M-4,6,8	470	340	325	282	60	M20X42	140	110	18	53	165.5	329	M50X1.5	930	850	20	400	350	450	8×18.5	5
250M -2	510	365	370	310	60	M20X42	140	110	18	53	185	347	M63X1.5	1010	935	22	500	450	550	8×18.5	5
250M-4,6,8	510	365	370	310	65	M20X42	140	110	18	58	185	347	M63X1.5	1010	935	22	500	450	550	8×18.5	5
280S -2	580	387	390	314	65	M20X42	140	110	18	58	146	359	M63X1.5	1085	1020	22	500	450	550	8×18.5	5
280S -4,6,8	580	387	390	314	75	M20X42	140	110	20	67.5	146	359	M63X1.5	1085	1020	22	500	450	550	8×18.5	5
280M-2	580	387	390	314	65	M20X42	140	110	18	58	146	359	M63X1.5	1135	1070	22	500	450	550	8×18.5	5
280M-4,6,8	580	387	390	314	75	M20X42	140	110	20	67.5	146	359	M63X1.5	1135	1070	22	500	450	550	8×18.5	5
315S-2	645	560	525	410	65	M20x42	140	110	18	58	275	415	M63X1.5	1275	1200	24	600	550	660	8×24	6
315S-4,6,8	645	560	525	410	80	M20x42	170	140	22	71	275	445	M63X1.5	1305	1230	24	600	550	660	8×24	6
315M- 2	645	560	525	410	65	M20x42	140	110	18	58	275	415	M63X1.5	1385	1310	24	600	550	660	8×24	6
315M-4,6,8	645	560	525	410	80	M20x42	170	140	22	71	275	445	M63X1.5	1415	1340	24	600	550	660	8×24	6
315L -2	645	560	525	410	65	M20x42	140	110	18	58	275	415	M63X1.5	1385	1310	24	600	550	660	8×24	6
315L-4,6,8	645	560	525	410	80	M20x42	170	140	22	71	275	445	M63X1.5	1415	1340	24	600	550	660	8×24	6
355M-2	710	710	705	500	75	M24x50	140	110	20	67.5	447	419	M63X1.5	1710	1650	24	740	680	800	8×24	6
355M-4,6,8	710	710	705	500	95	M24x50	170	140	25	86	447	449	M63X1.5	1740	1680	24	740	680	800	8×24	6
355L -2	710	710	705	500	75	M24x50	140	110	20	67.5	447	419	M63X1.5	1710	1650	24	740	680	800	8×24	6
355L -4,6,8	710	710	705	500	95	M24x50	170	140	25	86	447	449	M63X1.5	1740	1680	24	740	680	800	8×24	6

RYJ、RYJ2外形及安装尺寸图–B35

80~132

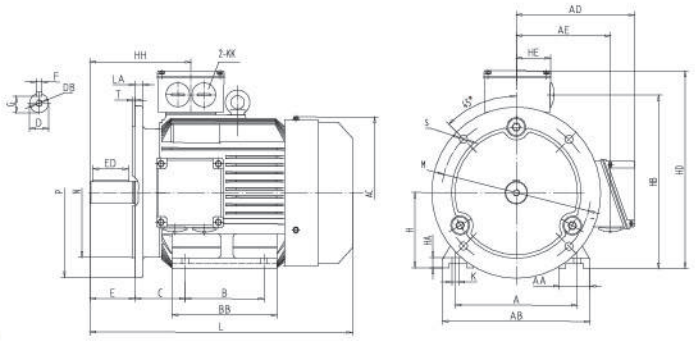

160~200

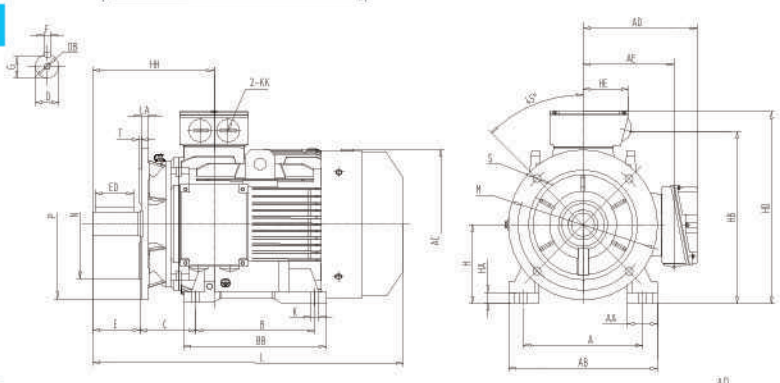

225~280

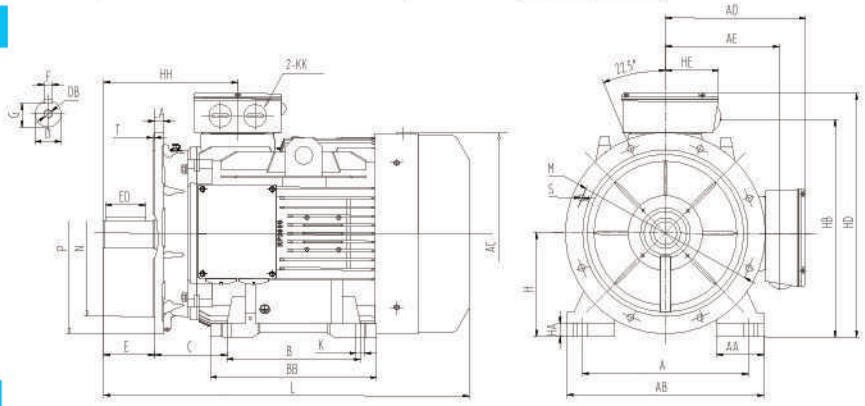

315~355

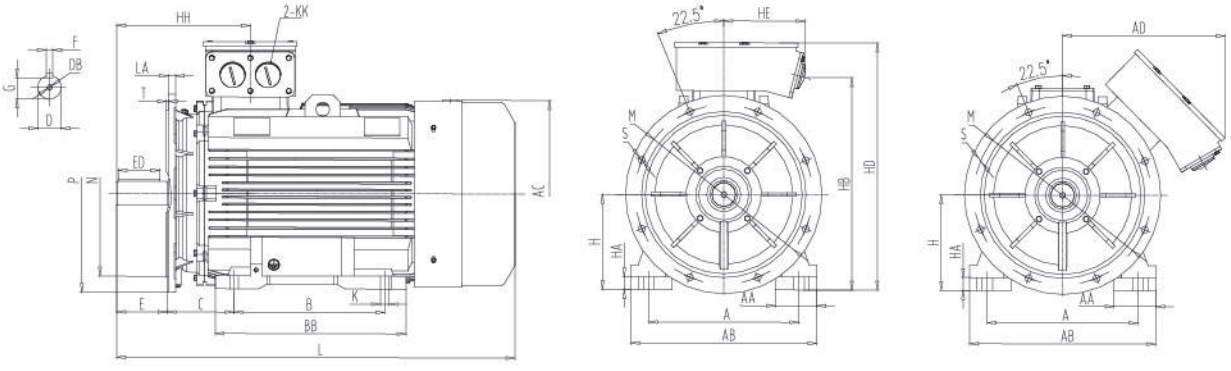

RYJ、RYJ2 SERIES DIMENSIONS FOOT AND FLANGE MOUNT B35 IM2001

RYJ、RYJ2外形及安装尺寸图–B35

FRAME	A	AA	AB	AC	AD	AE	B	BB	C	D	DB	E	ED	F	G	H	HA	HB	HD	HE	HH	K	KK	L	LA	M	N	P	S	T
80	125	36	165	160	150	112	100	150	50	19	M6X16	40	25	6	16	80	10	192	230	59	112	10	M25X1.5	310	12	165	130	200	4×12	3.5
90S	140	38	180	176	155	116	100	180	56	24	M8X19	50	40	8	20	90	12	206	245	59	166	10	M25X1.5	350	12	165	130	200	4×12	3.5
90L	140	38	180	176	155	116	125	205	56	24	M8X19	50	40	8	20	90	12	206	245	59	166	10	M25X1.5	375	12	165	130	200	4×12	3.5
100L	160	42	200	200	170	130	140	203	63	28	M10X22	60	45	8	24	100	14	230	270	59	143	12	M25X1.5	410	14	215	180	250	4×14.5	4
112M	190	45	226	220	198	153	140	180	70	28	M10X22	60	45	8	24	112	13	265	310	59	154	12	M32X1.5	400	14	215	180	250	4×14.5	4
132S	216	55	262	260	218	173	140	186	89	38	M12X28	80	63	10	33	132	18	305	350	59	179	12	M32X1.5	470	14	265	230	300	4×14.5	4
132M	216	55	262	260	205	164	178	224	89	38	M12X28	80	63	10	33	132	18	305	350	59	179	12	M32X1.5	510	14	265	230	300	4×14.5	4
160M	254	65	314	330	260	215	210	268	108	42	M16x36	110	90	12	37	160	20	360	420	95	262	14.5	M40x1.5	625	15	300	250	350	4×18.5	5
160L	254	65	314	330	260	215	254	312	108	42	M16x36	110	90	12	37	160	20	360	420	95	262	14.5	M40x1.5	670	15	300	250	350	4×18.5	5
180M	279	70	349	380	275	225	241	296	121	48	M16X36	110	90	14	43	180	22	400	455	95	270	15	M40X1.5	700	18	300	250	350	4×18.5	5
180L	279	70	349	380	275	225	279	335	121	48	M16X36	110	90	14	43	180	22	400	455	95	270	15	M40X1.5	740	18	300	250	350	4×18.5	5
200L	318	72	380	420	320	254	305	366	133	55	M20X42	110	90	16	49	200	23	445	510	165.5	296	19	M50X1.5	780	18	350	300	400	4×18.5	5
225S-4,6,8	356	75	431	470	340	270	286	380	149	60	M20X42	140	110	18	53	225	28	507	550	165.5	329	19	M50X1.5	820	20	400	350	450	8×18.5	5
225M-2	356	75	431	470	340	270	311	405	149	55	M20X42	110	90	16	49	225	28	507	550	165.5	299	19	M50X1.5	820	20	400	350	450	8×18.5	5
225M-4,6,8	356	75	431	470	340	270	311	405	149	60	M20X42	140	110	18	53	225	28	507	550	165.5	329	19	M50X1.5	850	20	400	350	450	8×18.5	5
250M-2	406	110	480	510	370	310	349	440	168	60	M20X42	140	110	18	53	250	38	560	620	185	355	24	M63X1.5	945	22	500	450	550	8×18.5	5
250M-4,6,8	406	110	480	510	370	310	349	440	168	65	M20X42	140	110	18	58	250	38	560	620	185	355	24	M63X1.5	945	22	500	450	550	8×18.5	5
280S-2	457	130	542	580	387	314	368	458	190	65	M20X42	140	110	18	58	280	33	600	670	146	359	24	M63X1.5	1020	22	500	450	550	8×18.5	5
280S-4,6,8	457	130	542	580	387	314	368	458	190	75	M20X42	140	110	20	68	280	33	600	670	146	359	24	M63X1.5	1020	22	500	450	550	8×18.5	5
280M2	457	130	542	580	387	314	419	509	190	65	M20X42	140	110	18	58	280	33	600	670	146	359	24	M63X1.5	1070	22	500	450	550	8×18.5	5
280M-4,6,8	457	130	542	580	387	314	419	509	190	75	M20X42	140	110	20	68	280	33	600	670	146	359	24	M63X1.5	1070	22	500	450	550	8×18.5	5
315S-2	508	140	628	645	560	440	406	595	216	65	M20x42	140	110	18	58	315	43	745	840	275	415	28	M63X1.5	1200	24	600	550	660	8×24	6
315S-4,6,8	508	140	628	645	560	440	406	595	216	80	M20x42	170	140	22	71	315	43	745	840	275	445	28	M63X1.5	1230	24	600	550	660	8×24	6
315M-2	508	140	628	645	560	440	457	645	216	65	M20x42	140	110	18	58	315	43	745	840	275	415	28	M63X1.5	1310	24	600	550	660	8×24	6
315M-4,6,8	508	140	628	645	560	440	457	645	216	80	M20x42	170	140	22	71	315	43	745	840	275	445	28	M63X1.5	1340	24	600	550	660	8×24	6
315L-2	508	140	628	645	560	440	508	645	216	65	M20x42	140	110	18	58	315	43	745	840	275	415	28	M63X1.5	1310	24	600	550	660	8×24	6
315L-4,6,8	508	140	628	645	560	440	508	645	216	80	M20x42	170	140	22	71	315	43	745	840	275	445	28	M63X1.5	1340	24	600	550	660	8×24	6
355M-2	610	150	740	720	710	483	560	805	254	75	M24x50	140	110	20	68	355	55	838	1060	447	419	28	M63X1.5	1650	24	740	680	800	8×24	6
355M-4,6,8	610	150	740	720	710	483	560	805	254	95	M24x50	170	140	25	86	355	55	838	1060	447	449	28	M63X1.5	1680	24	740	680	800	8×24	6
355L-2	610	150	740	720	710	483	630	805	254	75	M24x50	140	110	20	68	355	55	838	1060	447	419	28	M63X1.5	1650	24	740	680	800	8×24	6
355L-4,6,8	610	150	740	720	710	483	630	805	254	95	M24x50	170	140	25	86	355	55	838	1060	447	449	28	M63X1.5	1680	24	740	680	800	8×24	6

RYJ、RYJ2 SERIES TERMINAL BOX INFORMATION
RYJ、RYJ2 接线盒

80~132

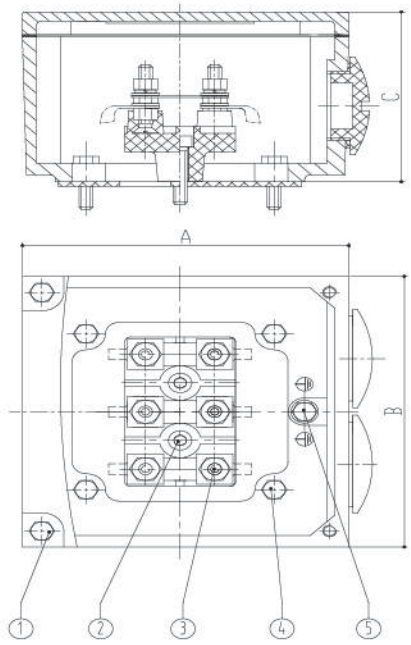

160~280

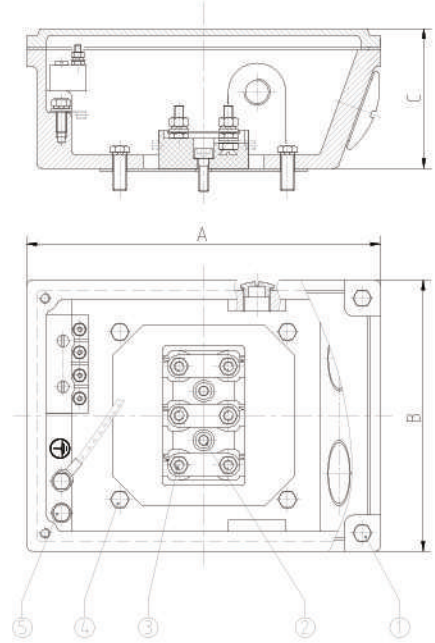

315

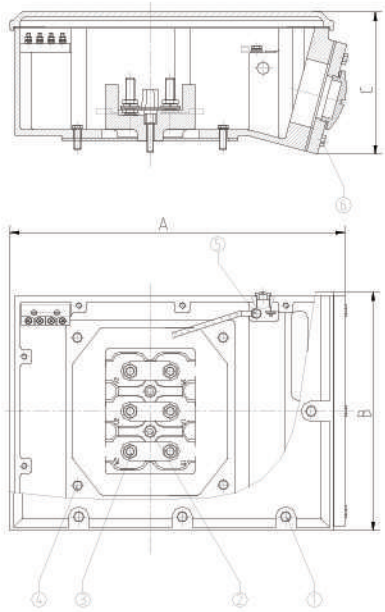

355

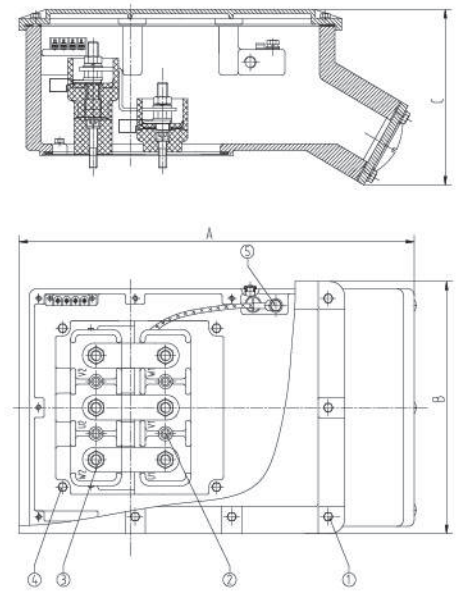

Frame	A	B	C	1	2	3	4	5	6	Metric Gland Sizes	PG Gland Sizes
80-100	118	118	61	M5×16	M5×20	M4	M5×16	M5×12		2×M25×1.5	2×PG16
112-132	118	118	77	M5×16	M5×25	M5	M5×20	M5×12		2×M32×1.5	2×PG21
160-180	215	165	85	M6×20	M6×20	M6	M6×25	M6×16		2×M40×1.5	2×PG29
200-225	285	190	102	M6×16	M8×25	M8	M8×25	M8×16		2×M50×1.5	2×PG36
250-280	314	218	110	M6×20	M10×30	M10	M8×25	M10×20		2×M63×1.5	2×PG42
315	460	317	190	M8×25	M10×55	M12	M12×30	M10×25	M8×30	2×M63×1.5	2×PG42
355	620	390	275	M8×30	M12×60	M16	M12×40	M10×20	M10×40	2×M63×1.5	2×PG42

RYJ、RYJ2 SERIES BEARING & OIL SEALS INFORMATION
RYJ、RYJ2 轴承和油封

BEARING DATA

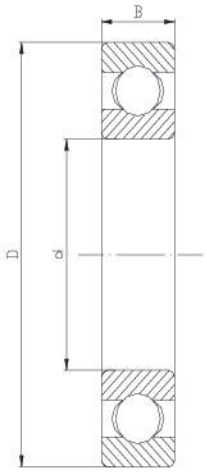

FRAME	DE	d	D	B	NDE	d	D	B
80	6204ZZCM	20	47	14	6204ZZCM	20	47	14
90	6205ZZCM	25	52	15	6205ZZCM	25	52	15
100	6206ZZCM	30	62	16	6206ZZCM	30	62	16
112	6206ZZCM	30	62	16	6206ZZCM	30	62	16
132	6208ZZCM	40	80	18	6208ZZCM	40	80	18
160	6309C3	45	100	25	6309C3	45	100	25
180	6311C3	55	120	29	6311C3	55	120	29
200	6312C3	60	130	31	6312C3	60	130	31
225	6313C3	65	140	33	6313C3	65	140	33
250	6314C3	70	150	35	6314C3	70	150	35
280-2	6314C3	70	150	35	6314C3	70	150	35
280-4,6,8	6317C3	85	180	41	6317C3	85	180	41
315-2	6317C3	85	180	41	6317C3	85	180	41
315-2 V1	6317C3	85	180	41	7317B	85	180	41
315-4,6,8	6319C3	95	200	45	6319C3	95	200	45
315-4,6,8 V1	6319C3	95	200	45	7319B	95	200	45
355-2	6319C3	95	200	45	6319C3	95	200	45
355-2 V1	6319C3	95	200	45	7319B	95	200	45
355-4,6,8	NU322C3	110	240	50	6322C3	110	240	50
355-4,6,8 V1	NU322C3	110	240	50	7322B	110	240	50

OIL SEAL DATA

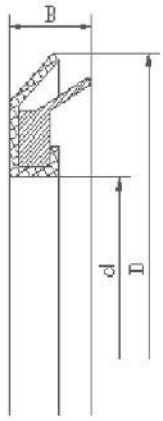

FRAME	DE			NDE		
	d	D	B	d	D	B
80	19.7	35	6	19.7	35	6
90	24.7	40	6	24.7	40	6
100	29.7	47	6	29.7	47	6
112	29.7	47	6	29.7	47	6
132	39.7	57	6	39.7	57	6
160	44.7	62	6	44.7	62	6
180	54.7	75	7	54.7	75	7
200	59.7	80	7	59.7	80	7
225	64.7	85	7	64.7	85	7
250	69.7	90	7	69.7	90	7
280-2	69.7	90	7	69.7	90	7
280-4,6,8	84.7	105	7	84.7	105	7
315-2	84.7	105	7	84.7	105	7
315-4,6,8	94.7	115	7	94.7	115	7
355-2	94.7	115	7	94.7	115	7
355-4,6,8	109.7	130	8	109.7	130	8

2 POLES –3000 RPM SYNCHRONOUS SPEED 50Hz IE2

型号	功率 (kW)	额定转速 (r/min)	额定 380V(A)	额定 400V(A)	额定 415V(A)	效 率			功率因数			堵转电流 /额定电流	额定转矩 (N.m)	堵转转矩 /额定转矩	最大转矩 /额定转矩	惯 量 (kg.m²)	噪音 dB(A)	重量 (kg)
Type	output (kW)	Speed (r/min)	Rated Current			Efficiency %FL			Power factor %FL			Ist/In	Tn (N.m)	Tst/Tn	Tmax/Tn	J (kg.m²)	Noise dB(A)	Weight (kg)
			380V(A)	400V(A)	415V(A)	100	75	50	100	75	50							
801–2	0.75	2860	1.8	1.7	1.7	77.4	77.0	73.8	0.81	0.77	0.75	6.8	2.5	2.3	2.3	0.0012	65	17.5
802–2	1.1	2860	2.6	2.4	2.3	79.6	79.5	78.1	0.82	0.8	0.76	7.3	3.7	2.3	2.3	0.0017	65	19.5
90S–2	1.5	2850	3.3	3.2	3.1	81.3	81.2	80.1	0.84	0.82	0.81	7.6	5.0	2.3	2.3	0.0026	70	28
90L–2	2.2	2855	4.7	4.5	4.3	83.2	83.1	82.9	0.85	0.84	0.83	7.8	7.4	2.3	2.3	0.0034	72	32
100L–2	3	2890	6.3	6.0	5.8	84.6	84.5	83.1	0.85	0.83	0.82	8.1	9.9	2.3	2.3	0.006	75	38.5
112M–2	4	2895	8.3	7.9	7.6	85.8	85.6	85.5	0.85	0.83	0.79	8.3	13.2	2.3	2.3	0.0086	76	40
132S1–2	5.5	2910	11.0	10.5	10.1	87.0	86.9	86.3	0.87	0.86	0.83	8.0	18.0	2.2	2.3	0.016	78	62
132S2–2	7.5	2910	14.9	14.1	13.6	88.1	88.8	88.4	0.87	0.85	0.84	7.8	24.6	2.2	2.3	0.0188	80	69
160M1–2	11	2940	21.5	20.4	19.7	89.4	88.8	86.8	0.87	0.85	0.84	7.9	35.7	2.2	2.3	0.0618	86	125
160M2–2	15	2940	29.0	27.6	26.6	90.3	90.0	88.5	0.87	0.85	0.84	8.0	48.7	2.2	2.3	0.0674	86	135
160L–2	18.5	2935	35.5	33.8	32.5	90.9	90.8	89.8	0.87	0.85	0.83	8.1	60.2	2.2	2.3	0.0808	86	151
180M–2	22	2945	42.1	40.0	38.5	91.3	90.9	89.2	0.87	0.84	0.82	8.2	71.3	2.2	2.3	0.1003	89	182
200L1–2	30	2960	56.9	54.1	52.1	92.0	91.7	90.4	0.87	0.86	0.84	7.5	96.8	2.2	2.3	0.189	92	262
200L2–2	37	2960	69.9	66.4	64.0	92.5	92.3	91.2	0.87	0.85	0.82	7.5	119.4	2.2	2.3	0.1971	92	274
225M–2	45	2970	84.6	80.4	77.5	92.9	92.6	91.4	0.87	0.84	0.83	7.6	144.7	2.2	2.3	0.3619	92	380
250M–2	55	2975	101.9	96.8	93.3	93.2	92.8	91.5	0.88	0.85	0.81	7.6	176.6	2.2	2.3	0.4387	93	426
280S–2	75	2980	141.3	134.2	129.3	93.8	93.3	91.9	0.86	0.85	0.83	6.9	240.4	2.0	2.3	0.8084	94	573
280M–2	90	2980	165.1	156.9	151.2	94.1	93.7	92.5	0.88	0.87	0.82	7.0	288.4	2.0	2.3	0.9208	94	625
315S–2	110	2980	199.1	189.2	182.3	94.3	93.8	92.5	0.89	0.85	0.79	7.1	352.5	2.0	2.2	1.693	96	895
315M–2	132	2980	238.2	226.3	218.1	94.6	94.2	93.1	0.89	0.87	0.84	7.1	423.0	2.0	2.2	1.8746	96	1009
315L1–2	160	2980	284.9	270.7	260.9	94.8	94.3	93.0	0.90	0.85	0.82	7.1	512.8	2.0	2.2	2.2144	99	1128
315L2–2	200	2975	355.4	337.6	325.4	95.0	94.6	93.5	0.90	0.87	0.83	7.1	642.0	2.0	2.2	2.5171	99	1269
355M–2	250	2980	444.3	422.1	406.8	95.0	94.7	93.6	0.90	0.86	0.82	7.1	801.2	2.0	2.2	3.8265	103	1627
355L–2	315	2980	559.8	531.8	512.6	95.0	94.7	93.7	0.90	0.88	0.85	7.1	1009.5	2.0	2.2	4.5516	103	1780

- Tn=Rated Torque
- IST=Locked Rotor Current
- TST=Locked Rotor Torque
- TM=Maxium Torque
- In=Rated Current

荣成市荣佳动力有限公司

RONGCHENG RONGJIA POWER CO., LTD

地址：山东省荣成市黎明南路699号
Add: No.699 Liming South Road, Rongcheng, Shandong
邮编（P.C.）:264300
办 公 室（Office） Tel : 0631-7517994 传真（Fax）: 0631-7517995 E-mail:rjdj@163169.net
销售公司 (Sale Dept) Tel : 0613-7517998 传真（Fax）: 0631-7517997 E-mail:xz@rongjia.com.cn
外 贸 部（Foreign Trade Dept） Tel :0631-7517996 E-mail:rjdj@rongjia.com.cn
技 术 部（Department of Technology）Tel : 0631-7517971 7517972 7517973 E-mail:rjdj_js@163169.net
物 资（Purchase Dept) Tel : 0631-7517992 7517993 E-mail:xz@rongjia.com.cn
生 产（Product Dept） Tel : 0631-7517991
Http//:www.rongjia.com.cn

RYJ，RYJ2
Series

EFF2 Common Efficiency
IE2 High Efficiency
IE3 Premium Efficiency

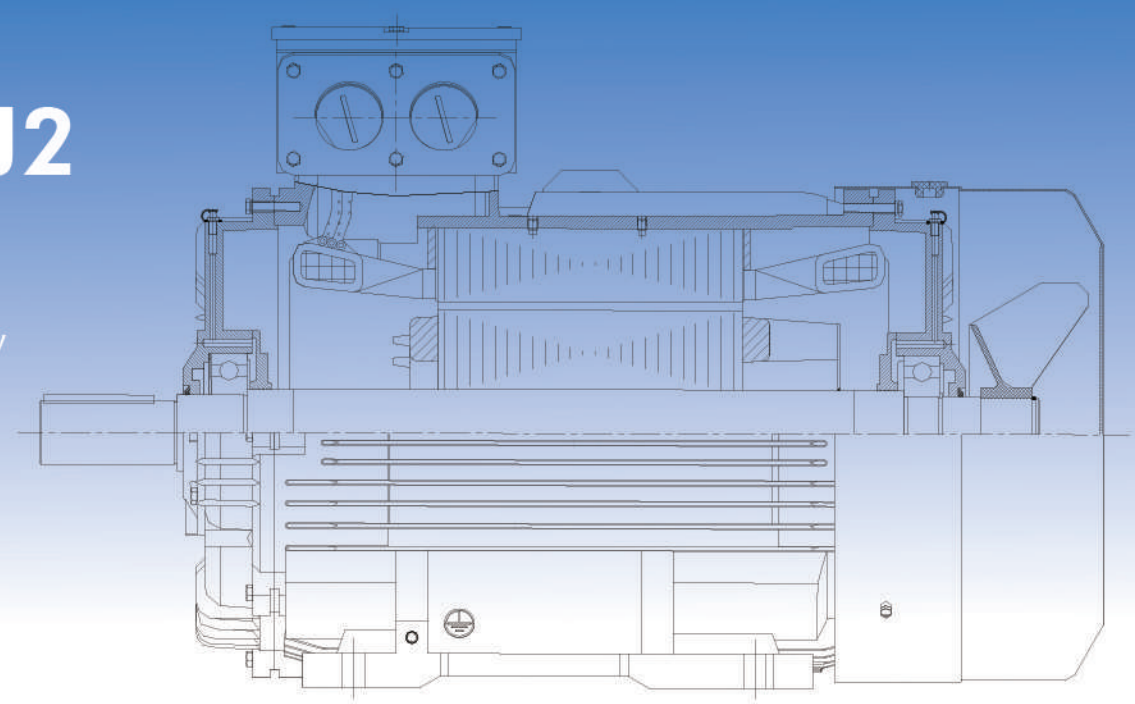

CAST IRON
Frame 80-355

RONGJIA MOTOR 荣佳电机 RONG JIA MOTOR

公司简介
BRIEF INTRODUCTION

荣成市荣佳动力有限公司（原荣成市荣佳电机有限公司），是我国中小型电机行业协会成员，是山东省汽车行业协会会员；公司位于胶东半岛的最东端---荣成市经济技术开发区内，与日本、韩国隔海相望，贸易往来十分活跃。

公司创建于1978年，现有员工400余人，占地面积9万m2，建筑面积3.7万m2，总资产2亿元，年可生产各种电动机400万KW，是集科研开发、生产制造、销售服务于一体的现代化电机专业生产企业。

公司主导产品有三相异步电动机及其派生的特种电机(变极多速、变频调速、矿山专用、高温消防），永磁同步电机（直驱螺杆泵电机、曳引机），开关磁阻电机（电动汽车、压力机等用途）等；产品畅销全国各地，并远销欧洲、非洲、东南亚、澳洲、美国、加拿大等国家和地区，深受用户好评。

公司先后取得了ISO9001体系认证、ISO/TS16949体系认证、南非SABS认证、中国强制性CCC认证、欧盟CE认证、美国UL认证、节能认证等证书。

公司拥有省级工程技术研究中心，与国内各大院校和科研院所业建立长期稳定的技术合作关系。 先后被评为山东省科技兴贸出口创新基地、山东省机电产品出口基地、山东省高新技术企业。

公司在新能源领域，生产的车用开关磁阻电机及驱动系统产品系列，广泛用于城市混合动力公交车、纯电动大巴车、纯电动中巴车、城市环卫车、混合动力MPV、微型纯电动车等。目前，公司已和北汽汽车新能源汽车公司、一汽集团、东风汽车等中国著名车企建立了密切的联系。

荣佳动力正通过向客户提供成熟的产品及完善的服务，致力于成为新能源汽车的一流供应商。

RONGCHENG RONGJIA POWER CO., LTD (Formerly RONGCHENG RONGJIA ELECTRIC MACHINE CO., LTD) is one member of the Association of Small and Medium Electric Machine Industry and Shandong Automobile Industry in China. The Company is in Rongcheng Economic and Technological Development Zone which located at the eastern end of Shandong Peninsula. Facing Japan and Korea across the sea, this area has very active trade activities.

Founded in 1978, It covers an area of 90000 m2 which includes building area 37000 m2, and the total asset is 200 million yuan. The annual production capacity is 4 million KW and there are 400 staffs and workers; RONGJIA has become one professional modern motor manufacturer that includes R&D, manufacture and distribution.

The main products are three-phase asynchronous motors and deriving special motors (variable-pole multi-speed, frequency control of motor speed, suitable for mine, High-temperature fire fighting), permanent magnet synchronous motor (direct drive screw pump motor, traction machine), switched reluctance motor for vehicles; Our products have great reputation in local and overseas markets, such as Europe, Southeast Asia, Australia, America, South Africa, Canada……

The company has passed ISO9001、ISO/TS16949、 CCC、 CE、 SABS、UL、Energy - Saving attestation certificates;

RONGJIA has Provincial Engineering Technology Research Center, and has established long and steady technical cooperative relations with several domestic universities and research institutes. RONGJIA has achieved great success and been awarded for technology innovation and mechanical product export.

In the new energy industry, our switched reluctance motor for vehicle and driving system products are widely used in urban hybrid electric bus, electric bus, city sanitation truck, hybrid MPV, micro-electric vehicle, etc. At present, RONGJIA has established close contact with many Chinese car companies, such as Beijing Automotive New Energy Automobile Company, China FAW Group, Dongfeng Automobile, etc.

RONGJIA is providing mature products and perfect service to customers, aiming to be a leading supplier of new energy vehicles.