RY2(1R)系列铁壳电动机-机座80-355

RY2(1R) SERIES CAST IRON MOTORS- FRAME 80-355

基本结构 Specification

RY2 80-132 FRAME

零部件名称 Parts Description

- 1、驱动端端盖带油封 Endshield D.E. with oil seal
- 2、驱动端波形弹簧 Wave Spring D.E.
- 3、驱动端轴承 Bearing D.E.
- 4、驱动端端盖 Endshield D.E.
- 5、接线盒 Terminal Box
- 6、接线盒盖 Terminal Box Lid
- 7、定子铁芯 Stator Lamination Pack
- 8、转子带轴 Rotor with shaft
- 9、机座 Stator Frame
- 10、非驱动端端盖 Endshield N.D.E.
- 11、非驱动端轴承 Bearing N.D.E.
- 12、非驱动端端盖带油封 Endshield N.D.E.with oil seal
- 13.风扇Fan
- 14.风罩Fan Cowl

安装 Mounting

B3-卧式底脚安装B3-Foot mounted

B5-卧式法兰安装B5-Flange mounted-horizontal.

B35-底脚法兰安装B3/B5-Foot and Flange mounted

V1-立式法兰安装V1-Flange mounted-vertical

基本结构说明 Specification

标准结构 Standard Construction

铸铁机座，端盖和接线盒 Cast iron Frame,Endshields. Terminal Box

钢板风罩Pressed Steel Fan Cowl.

聚丙烯玻璃纤维风扇Polypropylene,glass reinforced Fan

NSK或同等轴承NSK or equivalent Bearings

特性 Features

电机尺寸和额定功率符合IEC 60072

Dimensions and ratings to IEC60072.

IP55

顶出线/侧出线接线盒

Top or side mounted Terminal Box

接线盒可90度旋转

Terminal Box rotates in 90 deg. Increments

轴伸端钻孔绞丝

Drilled and tapped hole in D.E.of shaft

冷却方式 IC411

Cooling IC411

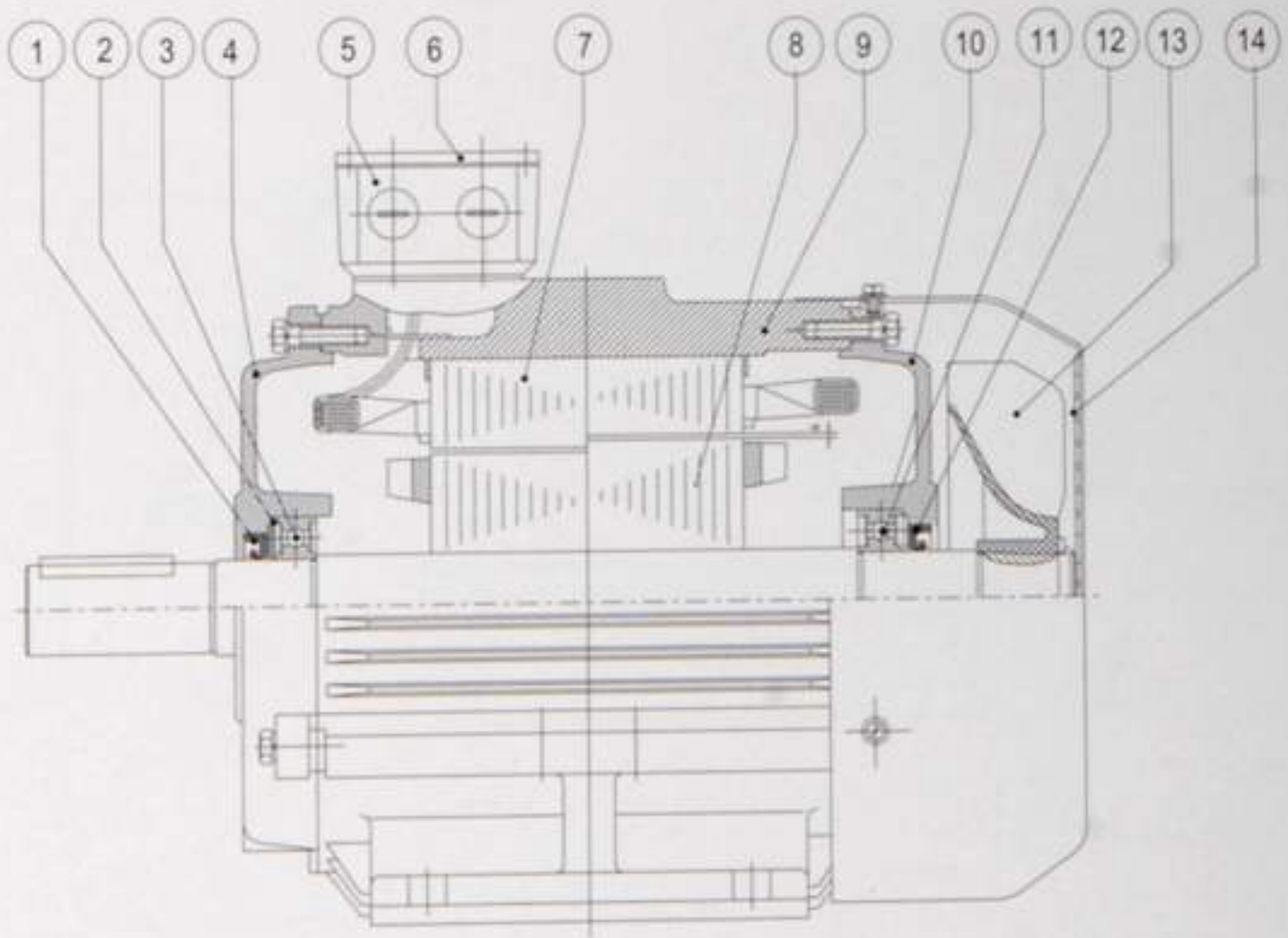

RY2 80-132

RY2 160–315 FRAME

零部件名称 Parts Description

- 1、驱动端外轴承盖带油封 Outer Bearing Cover D.E. with oil seal
- 2、驱动端波形弹簧 Wave Spring D.E.
- 3、驱动端轴承 Bearing D.E.
- 4、驱动端端盖 Endshield D.E.
- 5、驱动端内轴承盖 Inner Bearing Cover D.E.
- 6、接线盒 Terminal Box
- 7、接线盒盖 Terminal Box Lid
- 8、定子铁芯 Stator Lamination Pack
- 9、带轴转子 Rotor with shaft
- 10、机座 Stator Frame
- 11、非驱动端轴承内盖 Inner Bearing Cover N.D.E.
- 12、非驱动端端盖 Endshield N.D.E.
- 13、非驱动端轴承 Bearing N.D.E.
- 14、非驱动端轴承外盖带油封 Outer Bearing Cover N.D.E.with oil seal
- 15、风扇Fan
- 16、风罩Fan Cowl

基本结构说明 Specification

标准结构 Standard Construction

铸铁机座，端盖和接线盒 Cast iron Frame,Endshields.Terminal Box

钢板风罩 Pressed Steel Fan Cowl.

铸铁轴盖 Cast iron Bearings cover

聚丙烯玻璃纤维风扇 Polypropylene,glass reinforced Fan

NSK或同等轴承 NSK or equivalent Bearings

特性 Features

电机尺寸和额定功率符合IEC60072.

Dimensions and ratings to IEC60072.

IP55

顶出线接线盒Top mounted Terminal Box

接线盒可90度旋转Terminal Box rotates in 90 deg. Increments

轴伸端钻孔绞丝Drilled and tapped hole in D.E.of shaft

冷却方式IC411Cooling IC411

安装 Mounting

B3–卧式底脚安装B3–Foot mounted

B5–卧式法兰安装B5–Flange mounted–horizontal.

B35–底脚法兰安装B3/B5–Foot and Flange mounted

V1–立式法兰安装V1–Flange mounted–vertical

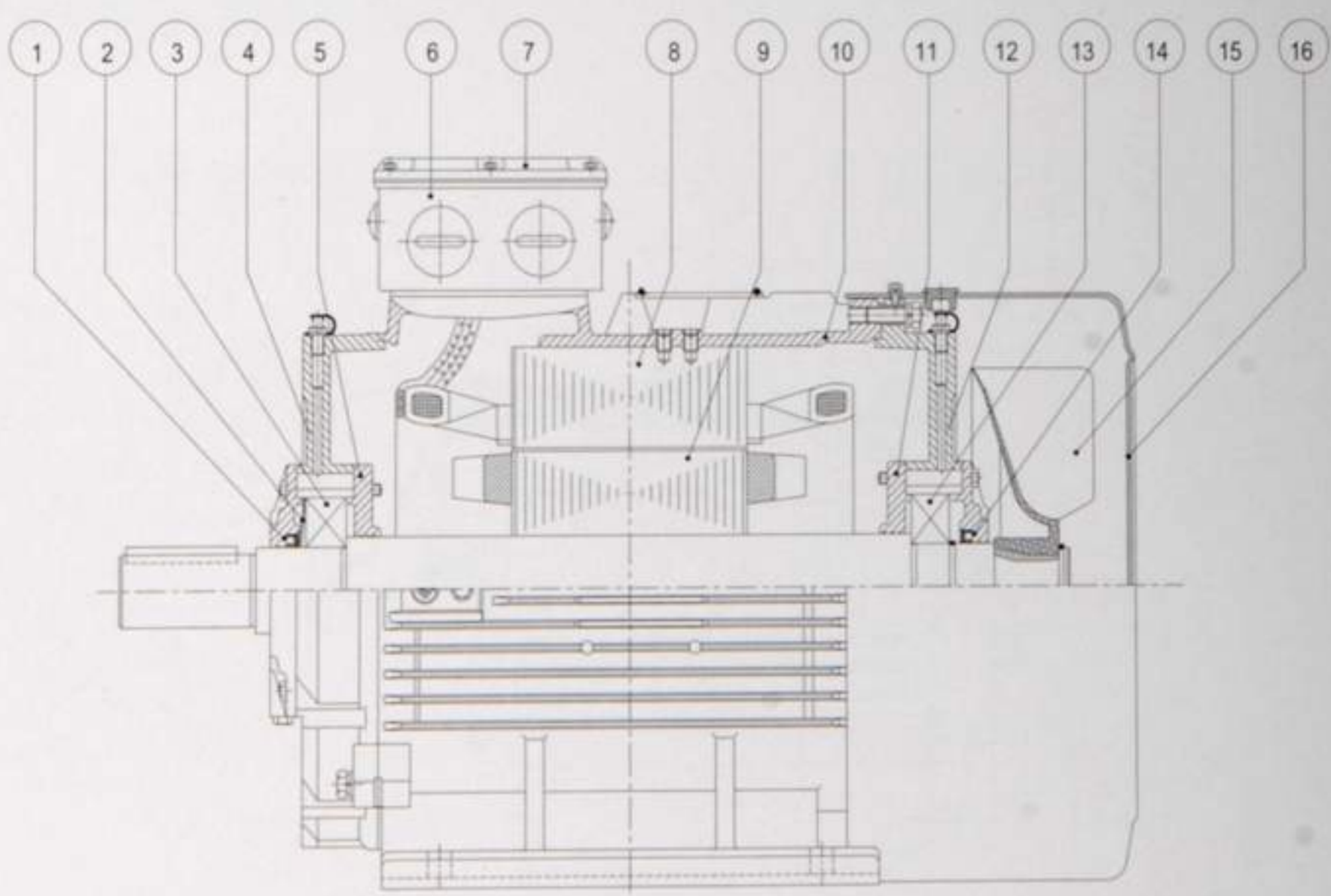

RY2 160-315

RY2 355 FRAME

零部件名称 Parts Description

- 1、驱动端轴承外盖 Outer Bearing Cover D.E.
- 2、甩油环 Flinger
- 3、驱动端轴承 Bearing D.E.
- 4、驱动端端盖 Endshield D.E.
- 5、驱动端轴承内盖 Inner Bearing Cover D.E.
- 6、接线盒 Terminal Box
- 7、接线盒盖 Terminal Box Lid
- 8、定子铁芯 Stator Lamination Pack
- 9、转子带轴 Rotor with shaft
- 10、机座 Stator Frame
- 11、内部风扇 Inner Fan
- 12、非驱动端轴承内盖 Inner Bearing Cover N.D.E.
- 13、非驱动端端盖 Endshield N.D.E.
- 14、非驱动端轴承 Bearing N.D.E.
- 15、甩油环 Flinger
- 16、非驱动端轴承外盖 Outer Bearing Cover N.D.E.
- 17、风扇 Fan
- 18、 风罩 Fan Cow

基本结构说明 Specification

标准构造Standard Construction

铸铁机座，端盖和接线盒Cast iron Frame,Endshields.Terminal Box.

钢板风罩Pressed Steel Fan Cowl.

铸铁轴盖Cast iron Bearings cover

聚丙烯玻璃纤维风扇Polypropylene,glass reinforced Fan

NSK或同等轴承NSK or equivalent Bearings

特性 Features

电机尺寸和额定功率符合IEC 60072.

Dimensions and ratings to IEC60072.

IP55

顶出线接线盒Top mounted Terminal Box

接线盒可90度旋转Terminal Box rotates in 90 deg. Increments

轴伸端钻孔绞丝Drilled and tapped hole in D.E.of shaft

冷却方式 IC411Cooling IC411

安装 Mounting

B3-卧式底脚安装B3-Foot mounted

B5-卧式法兰安装B5-Flange mounted-horizontal.

B35-底脚法兰安装B3/B5-Foot and Flange mounted

V1-立式法兰安装V1-Flange mounted-vertical

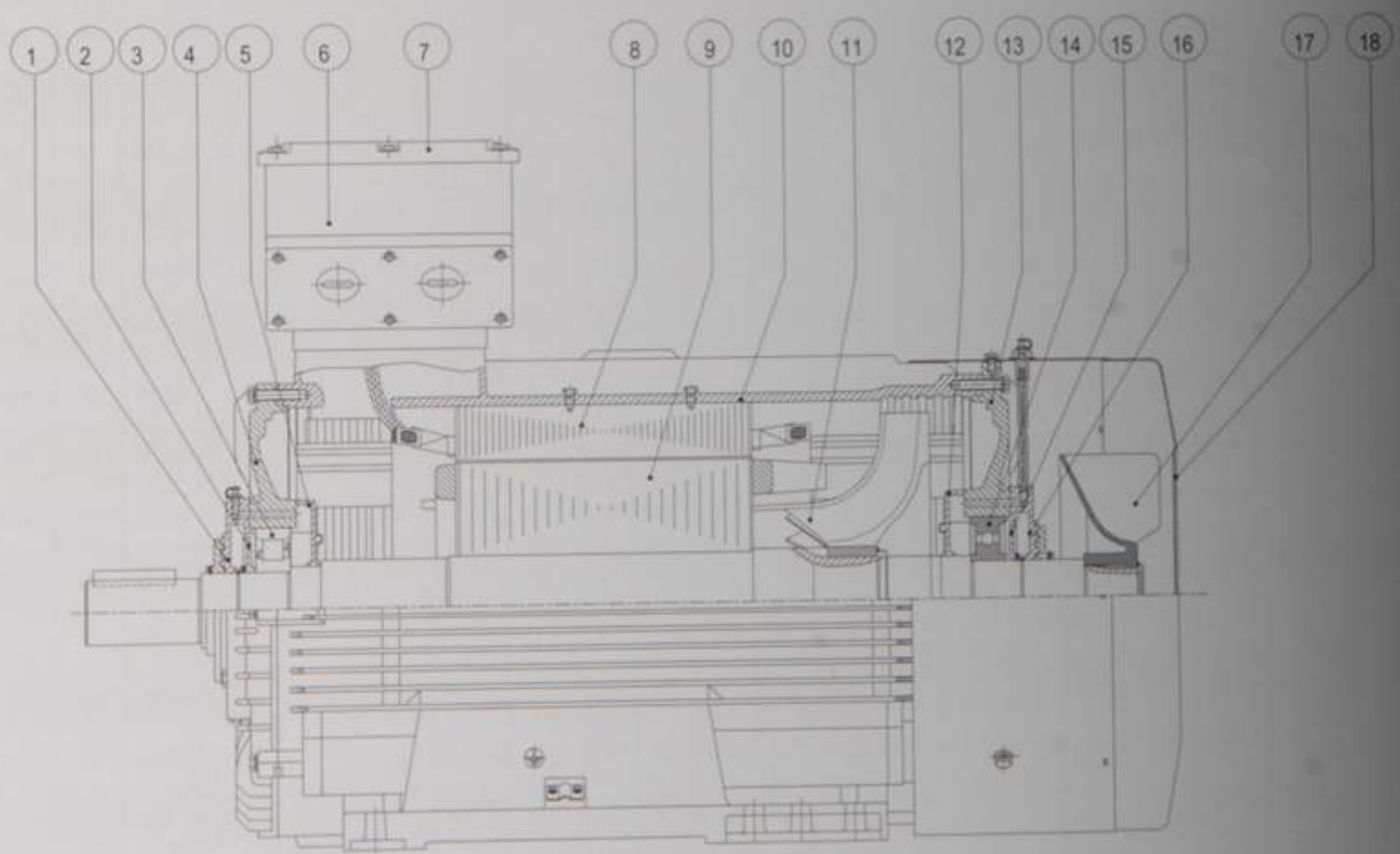

性能数据 Performance Data

2 POLES – 50Hz 3000 RPM SYNCHRONOUS SPEED

电机型号 Motor Type	功率 Output kw	额定转速 Full Load Speed (rpm)	空载电流 INL 400V (amps)	额定电流 IFL 380V (amps)	额定电流 IFL 400V (amps)	额定电流 IFL 415V (amps)	效率 Efficiency @ 100%FL	75%FL	50%FL	功率因数 Power Factor@ 100%FL	75%FL	50%FL	堵转电流/额定电流 IST/IFL	额定转矩 Full Load Torque N・m	堵转转矩/额定转矩 TST/TFL	起动转矩/额定转矩 TPU/TFL	最大转矩/额定转矩 TM/TFL	惯量 M of I J (kg・m2)	噪音 Noise Level 1m dB(A)	净重 NET Weight (kg)
RY2-80M1-2	0.75	2840	0.9	1.8	1.7	1.7	75	74.3	71.5	0.83	0.81	0.67	5.5	2.5	2.2	1.8	2.5	0.001	61	18
RY2-80M2-2	1.1	2845	1.2	2.6	2.5	2.4	76.2	78.2	75.3	0.84	0.79	0.67	5.5	3.7	2.2	2.1	2.6	0.001	63	19
RY2-90S-2	1.5	2850	1.4	3.5	3.3	3.2	78.5	79.5	77	0.84	0.81	0.71	6	5.0	2.7	2.5	3.2	0.001	65	24
RY2-90L-2	2.2	2850	2	4.9	4.6	4.4	81	82.2	80.2	0.85	0.81	0.72	6.1	7.4	2.9	2.5	3.1	0.001	69	27
RY2-100L-2	3	2860	2.2	6.3	6.0	5.8	82.6	83.5	82.1	0.87	0.85	0.75	6.9	10.0	3	3	3.5	0.004	72	38
RY2-112M1-2	4	2870	2.4	8.2	7.8	7.5	84.2	85.5	84.5	0.88	0.88	0.81	6.7	13.3	2.5	2.3	3.1	0.006	74	45
RY2-112M2-2	5.5	2890	3.3	11.3	10.7	10.3	84.2	86.9	86.3	0.88	0.88	0.81	7.4	18.2	2.6	2.4	3.3	0.007	78	50
RY2-132S1-2	5.5	2900	3.7	11.1	10.5	10.1	85.7	87.1	85.3	0.88	0.84	0.76	7.4	18.1	2.5	2.2	3.3	0.011	83	68
RY2-132S2-2	7.5	2915	4.5	14.9	14.1	13.6	87	87.3	85.1	0.88	0.87	0.78	7.6	24.6	2.4	1.8	3.2	0.013	83	75
RY2-132M-2	11	2915	5.9	21.8	20.7	20.0	87	88.2	87.1	0.88	0.88	0.81	7.2	36.0	2.4	2.2	3.3	0.028	83	87
RY2-160M1-2	11	2930	6.2	21.2	20.2	19.5	88.4	89.3	88.1	0.89	0.88	0.82	7.3	35.9	2.3	2	2.6	0.039	83	125
RY2-160M2-2	15	2930	7.6	28.6	27.2	26.2	89.4	88.9	84.4	0.89	0.89	0.84	7.2	48.9	2.3	2	2.6	0.044	83	135
RY2-160L-2	18.5	2935	8.1	34.7	33.0	31.8	90	91.1	89.7	0.9	0.9	0.83	7.3	60.2	2.2	1.8	2.7	0.057	84	155
RY2-180M-2	22	2940	11	41.0	39.0	37.6	90.5	88.5	86.5	0.9	0.87	0.82	7	71.5	2.4	1.5	3	0.077	84	180
RY2-200L1-2	30	2950	14.5	55.4	52.6	50.7	91.4	90.2	88	0.9	0.88	0.82	5.9	97.1	1.9	1.7	3	0.125	86	265
RY2-200L2-2	37	2955	17.3	67.9	64.5	62.2	92	92	90.5	0.9	0.86	0.79	6.5	119.6	2.3	1.8	3.3	0.140	88	285
RY2-225M-2	45	2960	20.5	82.1	78.0	75.2	92.5	91.9	89.5	0.9	0.88	0.85	7.1	145.2	2.4	2	3.3	0.230	90	340
RY2-250M1-2	55	2965	27.9	99.8	94.8	91.4	93	92.2	89.8	0.9	0.87	0.81	8	177.2	2.7	1.9	3.1	0.320	90	435
RY2-250M2-2	75	2965	35	136.1	129.3	124.7	93	93.9	92.5	0.9	0.89	0.82	6.8	241.6	2.2	1.8	3.2	0.412	90	520
RY2-280S-2	75	2965	33.2	135.3	128.5	123.9	93.6	92.5	90.1	0.9	0.89	0.84	6.8	241.6	2.2	1.7	3.2	0.595	90	540
RY2-280M1-2	90	2970	35.8	160.0	152.0	146.5	93.9	92.9	91	0.91	0.89	0.87	7.2	289.4	2.2	1.8	3	0.678	90	580
RY2-280M2-2	110	2970	36.4	195.6	185.8	179.1	93.9	94.3	93.1	0.91	0.92	0.91	6.8	353.7	2.6	2	3.1	0.860	88	635
RY2-315S-2	110	2975	45.5	195.4	185.6	178.9	94	93.6	91.7	0.91	0.89	0.82	6.1	353.1	2.3	2	2.6	1.170	90	1080
RY2-315M-2	132	2980	56	233.2	221.6	213.6	94.5	94.5	93.1	0.91	0.92	0.9	7.1	423.0	2.3	1.9	2.8	1.550	90	1175
RY2-315L1-2	160	2980	61	279.3	265.4	255.8	94.6	94.7	93.2	0.92	0.91	0.88	7.4	512.8	2.5	1.8	2.7	1.750	91	1300
RY2-315L2-2	200	2980	67.1	348.4	331.0	319.0	94.8	94.9	94.1	0.92	0.91	0.88	7.3	640.9	2.7	2	3	2.050	91	1300
RY2-355M-2	250	2985	108	433.7	412.0	397.1	95.2	94.5	92.5	0.92	0.92	0.89	7.1	799.8	1.8	1.5	2.6	3.560	93	1840
RY2-355L-2	315	2985	129	545.3	518.0	499.3	95.4	95.2	93.8	0.92	0.93	0.91	6.3	1007.8	1.7	1.5	2.9	4.120	94	1950

■INL=No Load Current ■IFL=Full Load Current ■IST=Locked Rotor Current ■TST=Locked Rotor Torque
■TPU=Pull Up Torque ■TM=Maximum Torque ■TFL=Full Load Torque

性能数据 Performance Data

4 POLES – 50Hz 1500 RPM SYNCHRONOUS SPEED

电机型号 Motor Type	功率 Output kw	额定转速 Full Load Speed (rpm)	空载电流 INL 400V (amps)	额定电流 IFL 380V (amps)	额定电流 IFL 400V (amps)	额定电流 IFL 415V (amps)	效率 Efficiency @ 100%FL	75%FL	50%FL	功率因数 Power Factor@ 100%FL	75%FL	50%FL	堵转电流/额定电流 IST/IFL	额定转矩 Full Load Torque N·m	堵转转矩/额定转矩 TST/TFL	起动转矩/额定转矩 TPU/TFL	最大转矩/额定转矩 TM/TFL	惯量 M of I J (kg·m2)	噪音 Noise Level 1m dB(A)	净重 NET Weight (kg)
RY2-80M1-4	0.55	1410	1	1.6	1.5	1.4	71	72.5	70.1	0.75	0.67	0.55	4.6	3.7	2.4	2.1	2.7	0.002	54	17
RY2-80M2-4	0.75	1415	1.3	2.1	2.0	1.9	73	72.9	69.5	0.76	0.66	0.54	4.4	5.1	2.2	2	2.7	0.002	57	18
RY2-90S-4	1.1	1405	1.8	2.8	2.7	2.6	76.2	76.6	75	0.77	0.68	0.55	4.3	7.5	2.2	2	3	0.002	61	24
RY2-90L-4	1.5	1410	2	3.7	3.5	3.4	78.5	79	78.5	0.79	0.71	0.58	4.7	10.2	2.5	2.2	3	0.003	61	26
RY2-100L1-4	2.2	1415	2.7	5.1	4.8	4.7	81	80.8	79.5	0.81	0.73	0.59	5.3	14.8	2.5	2.3	2.9	0.007	61	33
RY2-100L2-4	3	1420	3.3	6.7	6.4	6.2	82.6	82.7	81.5	0.82	0.75	0.63	5.7	20.2	2.4	2.2	3	0.007	63	37
RY2-112M-4	4	1440	4.1	8.8	8.4	8.1	84.2	83.9	81.7	0.82	0.77	0.69	5.7	26.5	2.7	2.2	3.1	0.010	67	47
RY2-132S-4	5.5	1450	5.4	11.7	11.2	10.8	85.7	87.1	85.6	0.83	0.77	0.65	6.8	36.2	2.3	2.1	3.1	0.022	68	70
RY2-132M1-4	7.5	1450	6.1	15.6	14.8	14.3	87	88.7	88.3	0.84	0.82	0.72	7.2	49.4	2.6	2.2	3.1	0.030	68	80
RY2-132M2-4	11	1450	7.9	22.9	21.7	20.9	87	88.6	88	0.84	0.8	0.72	6.2	72.4	2.2	1.9	2.8	0.063	69	88
RY2-160M-4	11	1460	8.3	22.5	21.4	20.6	88.4	87.8	85.1	0.84	0.82	0.76	6.8	72.0	2.3	1.9	2.8	0.075	70	128
RY2-160L-4	15	1460	11.1	30.0	28.5	27.5	89.4	89.5	84	0.85	0.8	0.74	7.4	98.1	2.6	2	3.4	0.093	73	148
RY2-180M-4	18.5	1465	12.5	36.3	34.5	33.3	90	90.5	88.6	0.86	0.83	0.73	7	120.6	2.1	1.9	3.2	0.140	75	175
RY2-180L-4	22	1470	14.7	42.9	40.8	39.3	90.5	91	89.3	0.86	0.85	0.76	6.8	142.9	2.1	1.8	3	0.159	75	185
RY2-200L-4	30	1475	17.5	58.0	55.1	53.1	91.4	92.3	91.2	0.86	0.87	0.81	6.5	194.2	2.2	1.9	3	0.265	80	275
RY2-225S-4	37	1475	22.1	70.2	66.7	64.3	92	92.2	91.1	0.87	0.87	0.77	7	239.6	2.1	1.7	3.2	0.404	81	323
RY2-225M-4	45	1475	24.5	85.0	80.7	77.8	92.5	92.5	91.3	0.87	0.86	0.8	6.6	291.4	2.2	1.8	2.8	0.470	82	345
RYR-250M1-4	55	1480	32.1	103.3	98.1	94.6	93	92.6	91	0.87	0.84	0.78	6.3	354.9	2.2	1.8	2.7	0.670	82	423
RYR-250M2-4	75	1480	36.2	140.8	133.8	129.0	93	93.9	91.9	0.87	0.87	0.83	6.3	484.0	2.2	1.7	3.2	0.880	82	550
RY2-280S-4	75	1480	36.5	139.9	132.9	128.1	93.6	93.6	92	0.87	0.86	0.81	6.3	484.0	2.3	1.6	2.8	1.120	84	574
RY2-280M1-4	90	1485	43.6	167.4	159.0	153.3	93.9	94	92.9	0.87	0.87	0.81	7.1	578.8	2.6	1.6	3	1.460	84	630
RY2-280M2-4	110	1480	52.4	204.6	194.4	187.3	93.9	94.3	93.1	0.87	0.88	0.83	6.2	709.8	2.4	2.2	2.8	2.680	85	750
RY2-315S-4	110	1485	51.2	201.0	190.9	184.0	94.5	94.4	93.8	0.88	0.88	0.84	5.8	707.4	2.1	1.7	2.8	3.100	88	1105
RY2-315M-4	132	1485	64.8	240.4	228.4	220.1	94.8	94.6	93	0.88	0.87	0.82	6.3	848.9	2.2	1.9	2.6	3.300	88	1235
RY2-315L1-4	160	1489	79.2	287.8	273.4	263.6	94.9	95	94	0.89	0.86	0.81	5.7	1026.2	2	1.8	2.6	3.790	87	1330
RY2-315L2-4	200	1489	102	359.8	341.8	329.4	94.9	94.9	94	0.89	0.86	0.81	6.2	1282.7	2.3	1.9	2.7	4.500	89	1360
RY2-355M-4	250	1490	104	443.3	421.2	405.9	95.2	94.7	93.2	0.9	0.89	0.85	6.5	1602.3	2.1	1.8	3.1	5.670	90	1900
RY2-355L-4	315	1490	136	558.6	530.7	511.5	95.2	94.8	94.3	0.9	0.89	0.88	6	2019.0	2.1	1.7	3.3	6.660	90	2050

■INL=No Load Current ■IFL=Full Load Current ■IST=Locked Rotor Current ■TST=Locked Rotor Torque
■TPU=Pull Up Torque ■TM=Maximum Torque ■TFL=Full Load Torque

6 POLES – 50Hz 1000 RPM SYNCHRONOUS SPEED

电机型号 Motor Type	功率 Output kw	额定转速 Full Load Speed (rpm)	空载电流 INL 400V (amps)	额定电流 IFL 380V (amps)	额定电流 IFL 400V (amps)	额定电流 IFL 415V (amps)	效率 Efficiency @			功率因数 Power Factor@			堵转电流/额定电流 IST/IFL	额定转矩 Full Load Torque N・m	堵转转矩/额定转矩 TST/TFL	起动转矩/额定转矩 TPU/TFL	最大转矩/额定转矩 TM/TFL	惯量 M of I J (kg・m2)	噪音 Nose Level 1m dB(A)	净重 NET Weight (kg)
							100%FL	75%FL	50%FL	100%FL	75%FL	50%FL								
RY2-80M1-6	0.37	915	0.9	1.3	1.2	1.2	62	63.2	55.5	0.7	0.63	0.52	3.2	3.9	1.8	1.6	2	0.002	46	17
RY2-80M2-6	0.55	915	1.1	1.8	1.7	1.6	65	70	65.2	0.72	0.62	0.52	3.3	5.7	2	1.8	2.2	0.003	50	20
RY2-90S-6	0.75	920	1.5	2.3	2.2	2.1	69	71.6	67.8	0.72	0.74	0.54	3.6	7.8	2.3	1.9	2.6	0.003	53	23
RY2-90L-6	1.1	925	2	3.2	3.0	2.9	72	73.5	70.4	0.73	0.65	0.52	3.5	11.4	2.1	2.1	2.5	0.004	59	26
RY2-100L-6	1.5	925	2.5	4.0	3.8	3.7	76	75.8	72.4	0.75	0.66	0.54	4.3	15.5	2.3	2.1	2.9	0.007	62	35
RY2-112M-6	2.2	935	2.9	5.6	5.3	5.1	79	78.1	75.9	0.76	0.74	0.6	4.4	22.5	2.2	1.7	2.5	0.014	65	45
RY2-132S-6	3	960	4.1	7.4	7.0	6.8	81	82.5	80.1	0.76	0.7	0.57	5.8	29.8	2.1	1.6	3	0.029	66	65
RY2-132M1-6	4	960	5.1	9.8	9.3	8.9	82	83.9	82.4	0.76	0.7	0.57	6.4	39.8	2.1	1.5	2.7	0.036	66	70
RY2-132M2-6	5.5	960	7.2	12.9	12.3	11.8	84	85.3	83.3	0.77	0.74	0.58	6.5	54.7	2	1.7	2.5	0.045	67	80
RY2-160M-6	7.5	965	7.5	17.2	16.3	15.8	86	88.3	87	0.77	0.74	0.67	5.4	74.2	2	1.7	2.3	0.088	71	125
RY2-160L-6	11	970	10.1	24.5	23.3	22.4	87.5	89.1	87.5	0.78	0.77	0.67	5.5	108.3	2	1.6	2.3	0.115	72	150
RY2-180L-6	15	970	13.5	31.6	30.0	28.9	89	89.4	87.9	0.81	0.78	0.66	6.2	147.7	2.1	1.7	2.5	0.207	72	185
RY2-200L1-6	18.5	975	16.1	38.6	36.6	35.3	90	91.5	90.4	0.81	0.76	0.64	6.2	181.2	2	1.7	2.8	0.315	73	260
RY2-200L2-6	22	975	16.5	44.7	42.5	41.0	90	88.9	87.8	0.83	0.81	0.71	5.9	215.5	2	1.8	2.5	0.360	73	270
RY2-225M-6	30	980	20.4	59.3	56.3	54.3	91.5	91.8	90.6	0.84	0.84	0.74	6.4	292.3	2	1.5	2.5	0.545	71	340
RYR-250M-6	37	980	23.7	71.1	67.5	65.1	92	91.7	90	0.86	0.82	0.75	6.7	360.6	2.3	1.7	2.6	0.834	76	430
RY2-280S-6	45	980	26.1	85.9	81.7	78.7	92.5	92.5	91.7	0.86	0.84	0.76	6.7	438.5	2.1	1.8	3	1.390	76	525
RY2-280M1-6	55	980	29	104.7	99.5	95.9	92.8	93	92.2	0.86	0.86	0.81	6.3	536.0	2.1	1.6	2.5	1.650	76	580
RY2-280M2-6	75	980	47.8	142.8	135.6	130.7	92.8	93.6	92.1	0.86	0.86	0.8	6.8	730.9	2.8	1.9	2.9	3.210	79	700
RY2-315S-6	75	985	44.5	141.7	134.6	129.8	93.5	94	93	0.86	0.84	0.81	7	727.2	2	1.8	2.7	4.100	80	1060
RY2-315M-6	90	985	50	169.5	161.0	155.2	93.8	94.5	93	0.86	0.84	0.77	6.2	872.6	2	1.8	2.4	4.300	80	1170
RY2-315L1-6	110	990	55.2	206.7	196.4	189.3	94	94.5	93.2	0.86	0.85	0.8	6.7	1061.1	2.4	1.8	2.8	5.450	82	1220
RY2-315L2-6	132	990	69	244.7	232.5	224.1	94.2	94.5	93.8	0.87	0.85	0.81	6.8	1273.3	2.3	1.9	2.9	6.120	82	1280
RY2-355M1-6	160	990	91	292.3	277.7	267.7	94.5	94.9	93	0.88	0.87	0.85	6.5	1543.4	1.9	1.4	2.5	8.850	85	1800
RY2-355M2-6	200	990	91.5	365.4	347.1	334.6	94.5	95.8	94.2	0.88	0.87	0.81	6.3	1929.3	2	1.6	2.5	9.550	85	1900
RY2-355L-6	250	990	104	456.8	433.9	418.2	94.5	95.9	94	0.88	0.88	0.84	6	2411.6	1.9	1.5	2.4	10.40	87	2050

■INL=No Load Current ■IFL=Full Load Current ■IST=Locked Rotor Current ■TST=Locked Rotor Torque
■TPU=Pull Up Torque ■TM=Maximum Torque ■TFL=Full Load Torque

8 POLES – 50Hz 750 RPM SYNCHRONOUS SPEED

电机型号 Motor Type	功率 Output kw	额定转速 Full Load Speed (rpm)	空载电流 INL 400V (amps)	额定电流 IFL 380V (amps)	额定电流 IFL 400V (amps)	额定电流 IFL 415V (amps)	效率 Efficiency @ 100%FL	75%FL	50%FL	功率因数 Power Factor@ 100%FL	75%FL	50%FL	堵转电流/额定电流 IST/IFL	额定转矩 Full Load Torque N・m	堵转转矩/额定转矩 TST/TFL	起动转矩/额定转矩 TPU/TFL	最大转矩/额定转矩 TM/TFL	惯量 M of I J (kg・m2)	噪音 Nose Level 1m dB(A)	净重 NET Weight (kg)
RY2-80M1-8	0.18	680	0.7	0.9	0.8	0.8	51	54	45	0.61	0.55	0.46	3.2	2.5	2.1	2	2.4	0.002	50	17
RY2-80M2-8	0.25	690	1	1.2	1.1	1.1	54	55.2	45.1	0.61	0.55	0.47	3.3	3.5	2	2	2.2	0.003	50	19
RY2-90S-8	0.37	700	1.1	1.5	1.4	1.4	62	64.9	56.2	0.61	0.53	0.44	3.6	5.0	1.9	1.9	2.5	0.004	53	23
RY2-90L-8	0.55	700	1.7	2.2	2.1	2.0	63	67.1	59.3	0.61	0.51	0.42	3.5	7.5	1.9	1.9	2.3	0.004	54	25
RY2-100L1-8	0.75	700	2	2.4	2.3	2.2	71	70.2	62.5	0.67	0.57	0.46	4	10.2	2.1	1.9	2.4	0.008	56	33
RY2-100L2-8	1.1	700	2.5	3.3	3.2	3.0	73	74.1	68.8	0.69	0.59	0.47	3.7	15.0	2.2	1.8	2.4	0.010	59	38
RY2-112M1-8	1.5	700	3	4.4	4.2	4.0	75	76.8	73.7	0.69	0.6	0.5	4.2	20.5	2.2	1.7	2.7	0.017	61	50
RY2-112M2-8	2.2	700	3.6	6.5	6.1	5.9	75	76.9	73.6	0.69	0.62	0.51	4.5	30.0	2	1.8	2.6	0.018	62	55
RY2-132S-8	2.2	705	3.9	6.0	5.7	5.5	78	80.1	77.5	0.71	0.63	0.51	4.7	29.8	2.1	1.9	2.5	0.030	65	58
RY2-132M1-8	3	705	4.4	7.9	7.5	7.2	79	82.6	79.5	0.73	0.67	0.55	4.6	40.6	2.1	2	2.6	0.040	65	68
RY2-132M2-8	4	706	5.8	10.5	10.0	9.6	79	81.6	79.8	0.73	0.69	0.57	4.6	54.1	1.9	1.7	2.4	0.040	67	74
RY2-160M1-8	4	710	6	10.3	9.8	9.4	81	81.5	80.3	0.73	0.66	0.56	4.5	53.8	2.1	1.8	2.7	0.075	67	113
RY2-160M2-8	5.5	715	7.7	13.6	12.9	12.5	83	87.1	85.6	0.74	0.67	0.55	5	73.5	2.3	2	2.8	0.093	68	123
RY2-160L-8	7.5	720	9.5	17.8	16.9	16.3	85.5	87.4	85.9	0.75	0.69	0.55	6	99.5	2.2	1.8	2.6	0.125	69	150
RY2-180L-8	11	730	12.4	25.1	23.9	23.0	87.5	87.5	85.9	0.76	0.67	0.56	5.5	143.9	2.2	1.8	2.5	0.202	70	178
RY2-200L-8	15	730	15.5	34.1	32.4	31.2	88	89.6	88.2	0.76	0.72	0.59	5.8	196.2	2.1	1.7	2.8	0.338	71	233
RY2-225S-8	18.5	731	20.3	41.1	39.0	37.6	90	89.5	88.8	0.76	0.73	0.65	6.3	241.7	2.1	1.7	2.5	0.490	73	283
RY2-225M-8	22	735	20.8	47.4	45.0	43.4	90.5	90.6	89.9	0.78	0.74	0.63	6.2	285.9	2.2	1.9	2.5	0.550	73	323
RYR-250M-8	30	735	28.6	63.4	60.2	58.1	91	90.5	88.6	0.79	0.76	0.65	5.9	389.8	2.3	2	3	0.830	74	400
RY2-280S-8	37	735	30.5	77.8	73.9	71.2	91.5	91.2	90.1	0.79	0.77	0.69	6.3	480.7	2.1	1.8	2.8	1.390	75	515
RY2-280M1-8	45	740	36	94.1	89.4	86.1	92	91.3	89.5	0.79	0.76	0.64	6.4	580.7	1.9	1.6	2.5	1.650	76	566
RY2-280M2-8	55	740	41.8	115.0	109.2	105.3	92	91.6	90.5	0.79	0.77	0.67	6.9	709.8	2.3	2	2.9	3.650	77	678
RY2-315S-8	55	740	43.2	111.2	105.6	101.8	92.8	93.2	92.5	0.81	0.78	0.7	6.8	709.8	1.9	1.8	2.7	4.790	78	790
RY2-315M-8	75	740	49.5	151.3	143.7	138.5	93	93.9	91.6	0.81	0.8	0.72	7	967.9	2	1.8	2.4	5.580	78	970
RY2-315L1-8	90	740	67	177.8	168.9	162.8	93.8	94	92	0.82	0.76	0.69	6.7	1161.5	2.4	2	2.8	6.370	80	1060
RY2-315L2-8	110	740	75.6	216.8	206.0	198.5	94	94.3	92.5	0.82	0.8	0.72	6.4	1419.6	2.4	2	2.5	7.230	81	1170
RY2-355M1-8	132	740	87.3	261.0	248.0	239.0	93.7	94.9	93.6	0.82	0.81	0.72	5.8	1703.5	1.7	1.1	2.3	10.54	82	1560
RY2-355M2-8	160	743	105.8	314.7	299.0	288.2	94.2	95.1	94.2	0.82	0.83	0.75	5.5	2056.5	1.5	1.2	2.3	11.72	86	1650
RY2-355L-8	200	743	112	387.4	368.1	354.8	94.5	95.5	94.6	0.83	0.86	0.78	6	2570.7	1.3	1.2	3.3	12.85	87	1940

■INL=No Load Current ■IFL=Full Load Current ■IST=Locked Rotor Current ■TST=Locked Rotor Torque
■TPU=Pull Up Torque ■TM=Maximum Torque ■TFL=Full Load Torque

RY2 外形及安装尺寸—B3 RY2 SERIES DIMENSIONS FOOT MOUNT B3 IM1001

RY2-80~132

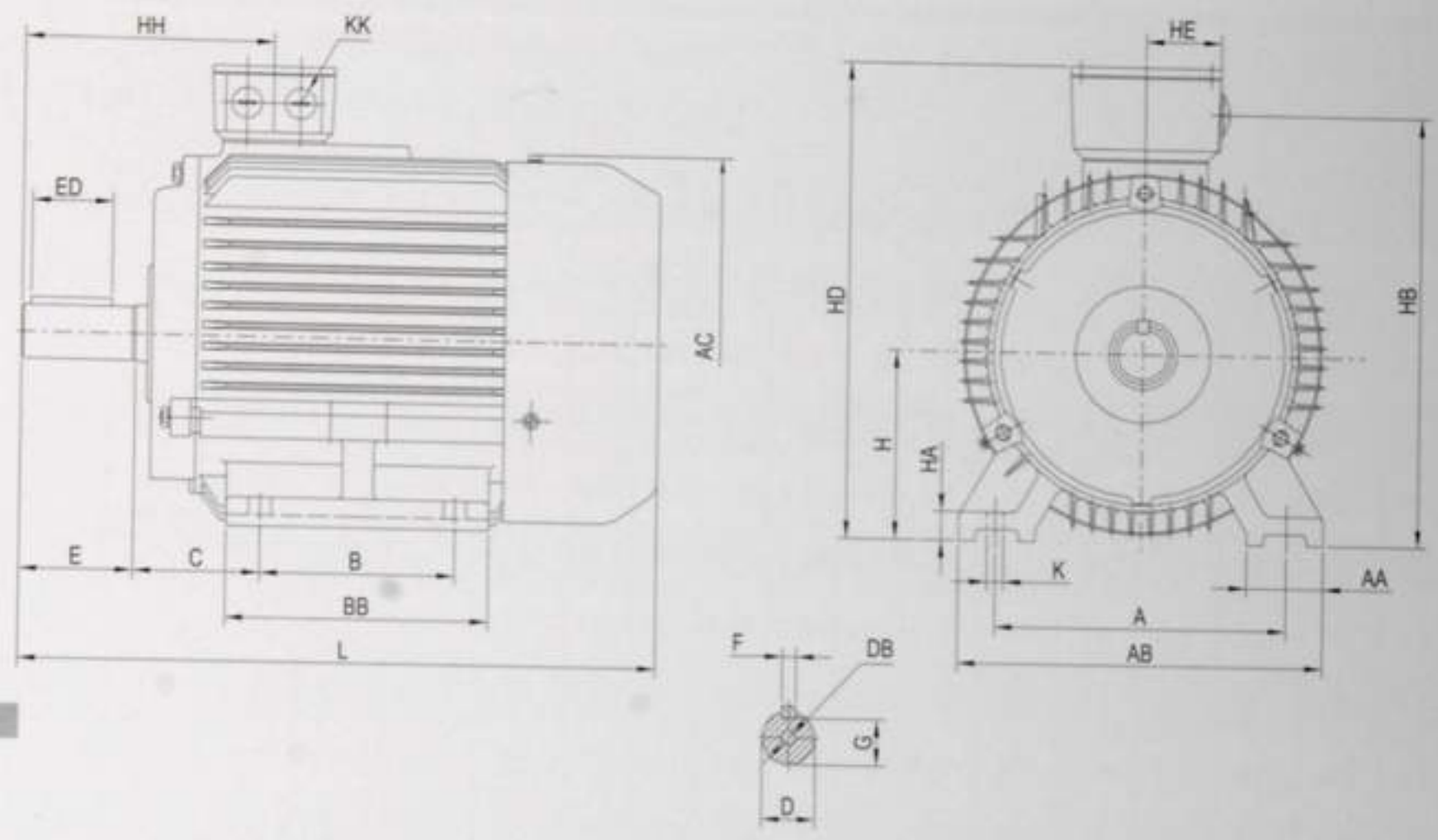

RY2-160

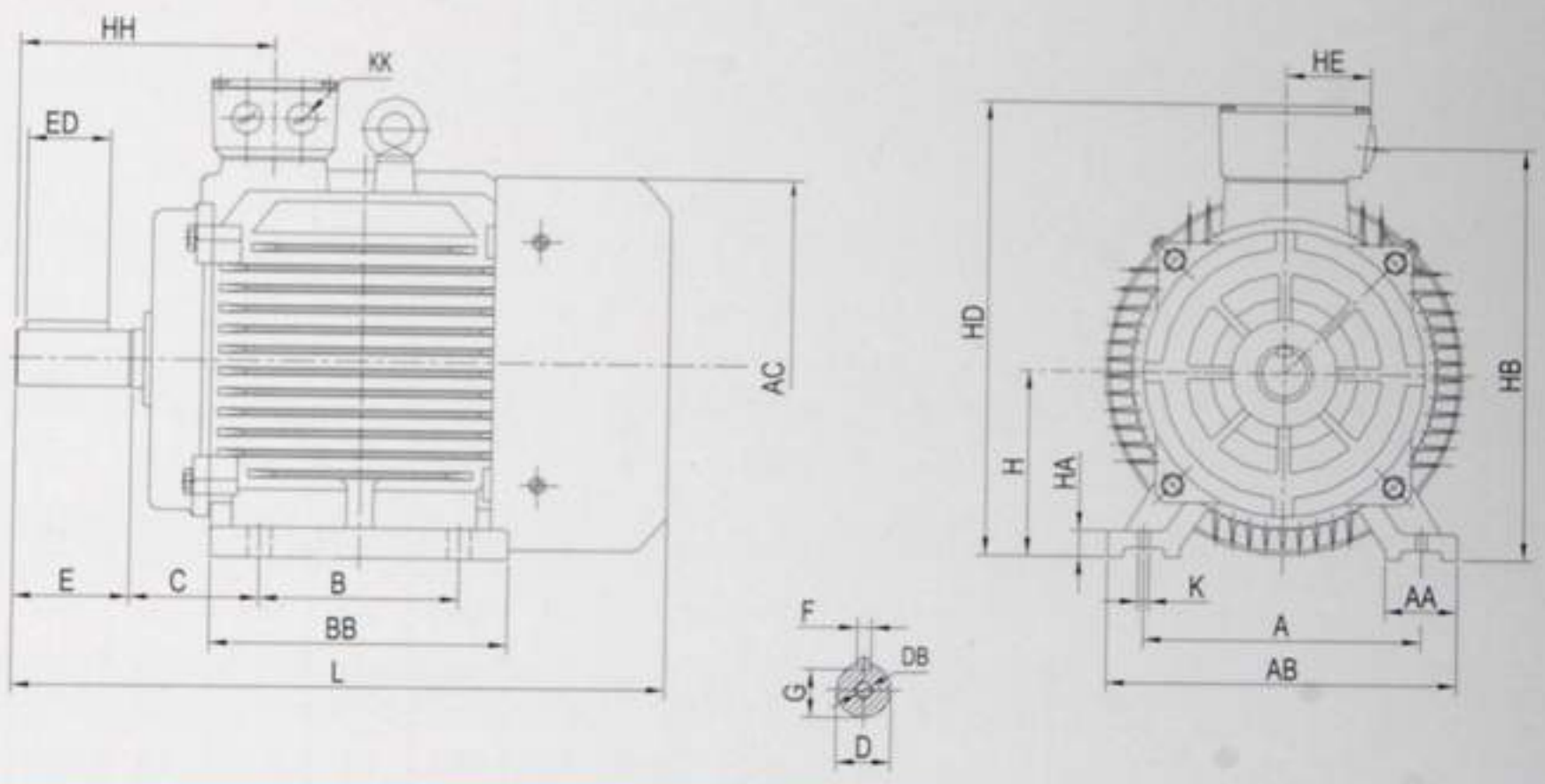

型号 Model	A	AA	AB	AC	B	BB	C	D	DB	E	ED	F	G	H	HA	HB	HD	HE	HH	K	KK	L
RY2-80	125	34	165	175	100	130	50	19	M6X16	40	25	6	15.5	80	12	195	225	59	112	10	2-M25X1.5	295
RY2-90S	140	36	180	195	100	140	56	24	M8X19	50	40	8	20	90	12	205	245	59	125	10	2-M25X1.5	320
RY2-90L	140	36	180	195	125	165	56	24	M8X19	50	40	8	20	90	12	205	245	59	125	10	2-M25X1.5	345
RY2-100L	160	40	205	215	140	176	63	28	M10X22	60	45	8	24	100	14	228	280	59	144	12	2-M25X1.5	385
RY2-112M	190	45	230	240	140	180	70	28	M10X22	60	45	8	24	112	13	265	310	59	147	12	2-M32X1.5	400
RY2-132S	216	55	270	275	140	190	89	38	M12X28	80	63	10	33	132	18	305	350	59	179	12	2-M32X1.5	470
RY2-132M	216	55	270	275	178	230	89	38	M12X28	80	63	10	33	132	18	305	350	59	179	12	2-M32X1.5	510
RY2-160M	254	65	320	330	210	260	108	42	M16x36	110	90	12	37	160	20	370	420	95	256	14.5	2-M40x1.5	615
RY2-160L	254	65	320	330	254	304	108	42	M16x36	110	90	12	37	160	20	370	420	95	256	14.5	2-M40x1.5	670

RY2 外形及安装尺寸—B3 RY2 SERIES DIMENSIONS FOOT MOUNT B3 IM1001

RY2-180~280

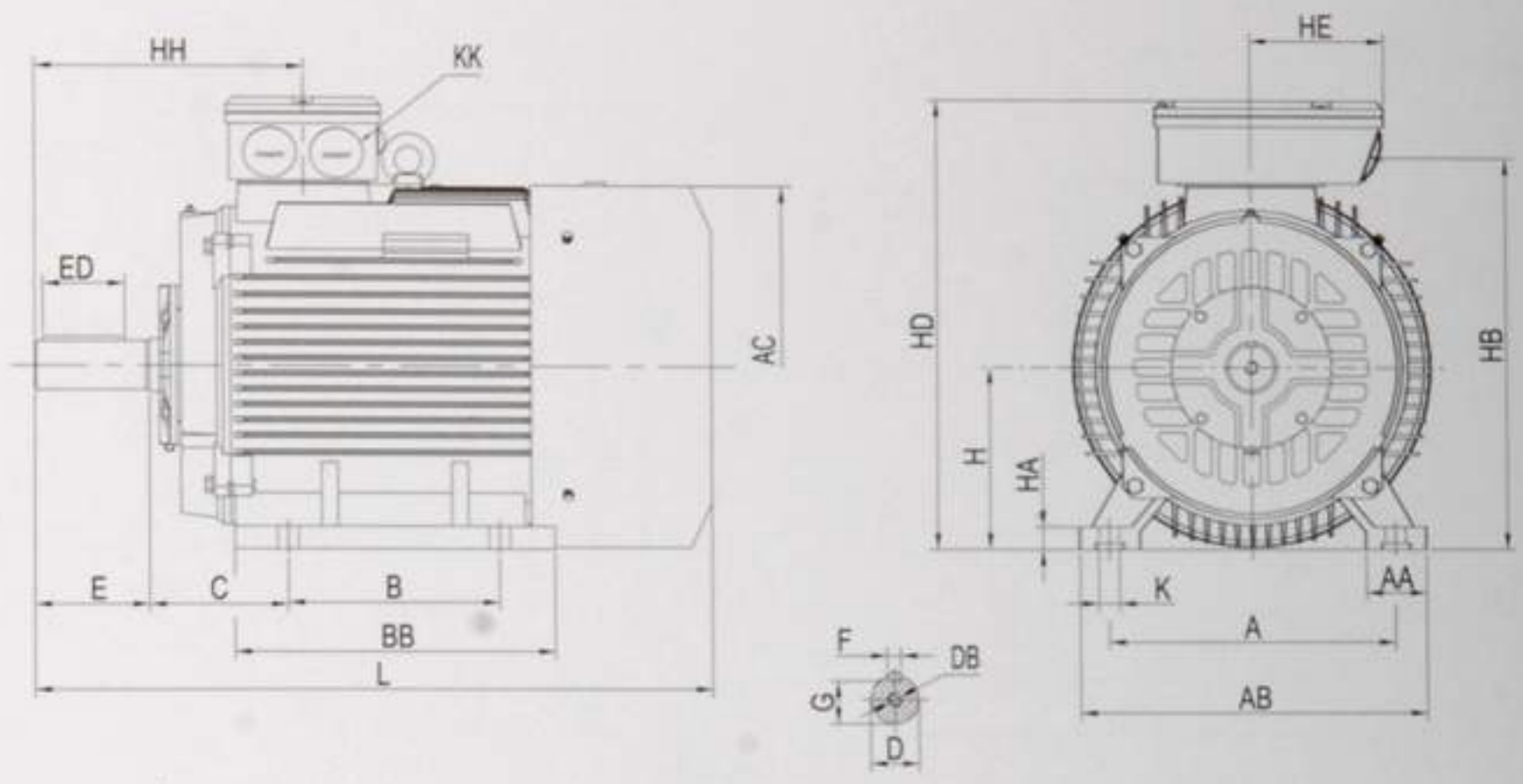

型号 Model	A	AA	AB	AC	B	BB	C	D	DB	E	ED	F	G	H	HA	HB	HD	HE	HH	K	KK	L
RY2-180M	279	70	355	380	241	311	121	48	M16X36	110	90	14	42.5	180	22	405	460	95	270	14.5	2-M40X1.5	700
RY2-180L	279	70	355	380	279	349	121	48	M16X36	110	90	14	42.5	180	22	405	460	95	270	14.5	2-M40X1.5	740
RY2-200L	318	70	395	420	305	369	133	55	M20X42	110	90	16	49	200	25	445	520	165	306	18.5	2-M50X1.5	770
RY2-225S-4,8	356	75	435	470	286	368	149	60	M20X42	140	110	18	53	225	28	507	570	165	329	18.5	2-M50X1.5	815
RY2-225M-2	356	75	435	470	311	393	149	55	M20X42	110	90	16	49	225	28	507	570	165	299	18.5	2-M50X1.5	820
RY2-225M-4,6,8	356	75	435	470	311	393	149	60	M20X42	140	110	18	53	225	28	507	570	165	329	18.5	2-M50X1.5	845
RY2-250M-2	406	80	490	510	349	445	168	60	M20X42	140	110	18	53	250	30	560	620	185	349	24	2-M63X1.5	910
RY2-250M-4,6,8	406	80	490	510	349	445	168	65	M20X42	140	110	18	58	250	30	560	620	185	349	24	2-M63X1.5	910
RY2-280S-2	457	85	550	580	368	485	190	65	M20X42	140	110	18	58	280	35	600	690	185	356	24	2-M63X1.5	985
RY2-280S-4,6,8	457	85	550	580	368	485	190	75	M20X42	140	110	20	67.5	280	35	600	690	185	356	24	2-M63X1.5	985
RY2-280M-2	457	85	550	580	419	536	190	65	M20X42	140	110	18	58	280	35	600	690	185	356	24	2-M63X1.5	1035
RY2-280M-4,6,8	457	85	550	580	419	536	190	75	M20X42	140	110	20	67.5	280	35	600	690	185	356	24	2-M63X1.5	1035

RY2 外形及安装尺寸—B3 RY2 SERIES DIMENSIONS FOOT MOUNT B3 IM1001

RY2-315

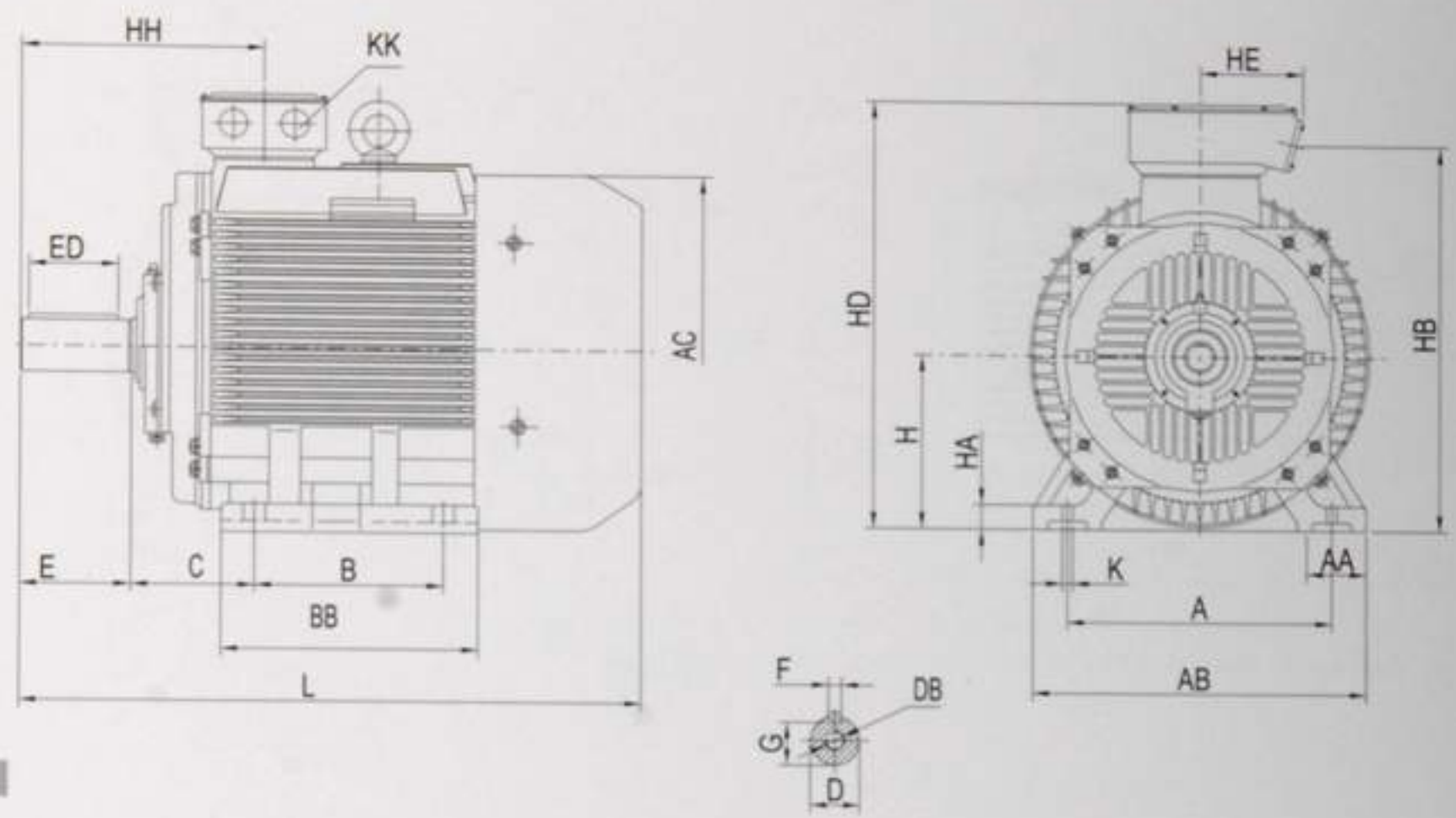

RY2-355

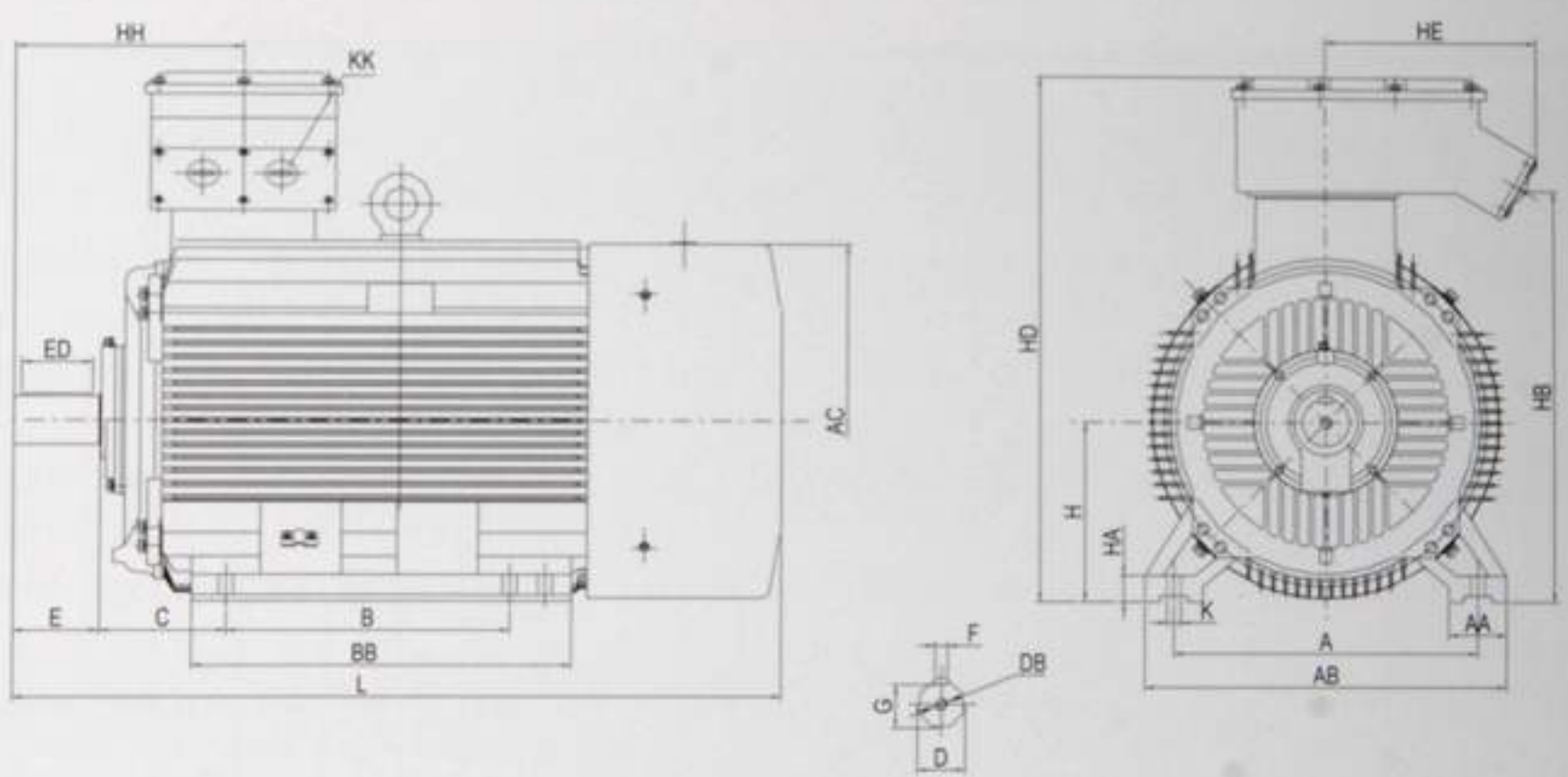

型号 Model	A	AA	AB	AC	B	BB	C	D	DB	E	ED	F	G	H	HA	HB	HD	HE	HH	K	KK	L
RY2-315S-2	508	120	635	645	406	570	216	65	M24x42	140	110	18	58	315	45	755	865	245	397	28	2-M63X1.5	1160
RY2-315S-4,6,8,10	508	120	635	645	406	570	216	80	M24x42	170	140	22	71	315	45	755	865	245	427	28	2-M63X1.5	1270
RY2-315M-2	508	120	635	645	457	680	216	65	M24x42	140	110	18	58	315	45	755	865	245	397	28	2-M63X1.5	1190
RY2-315M-4,6,8,10	508	120	635	645	457	680	216	80	M24x42	170	140	22	71	315	45	755	865	245	427	28	2-M63X1.5	1300
RY2-315L-2	508	120	635	645	508	680	216	65	M24x42	140	110	18	58	315	45	755	865	245	397	28	2-M63X1.5	1190
RY2-315L-4,6,8,10	508	120	635	645	508	680	216	80	M24x42	170	140	22	71	315	45	755	865	245	427	28	2-M63X1.5	1300
RY2-355M-2	610	116	730	710	560	750	254	75	M24x42	140	110	20	67.5	355	52	906	1040	436	454	28	2-M63X1.5	1500
RY2-355M-4,6,8,10	610	116	730	710	560	750	254	95	M24x42	170	140	25	86	355	52	906	1040	436	454	28	2-M63X1.5	1530
RY2-355L-2	610	116	730	710	630	750	254	75	M24x42	140	110	20	67.5	355	52	906	1040	436	454	28	2-M63X1.5	1500
RY2-355L-4,6,8,10	610	116	730	710	630	750	254	95	M24x42	170	140	25	86	355	52	906	1040	436	454	28	2-M63X1.5	1530

RY2 外形及安装尺寸—B5 RY2 SERIES DIMENSIONS FLANGE MOUNT B5 IM3001

RY2-80-132

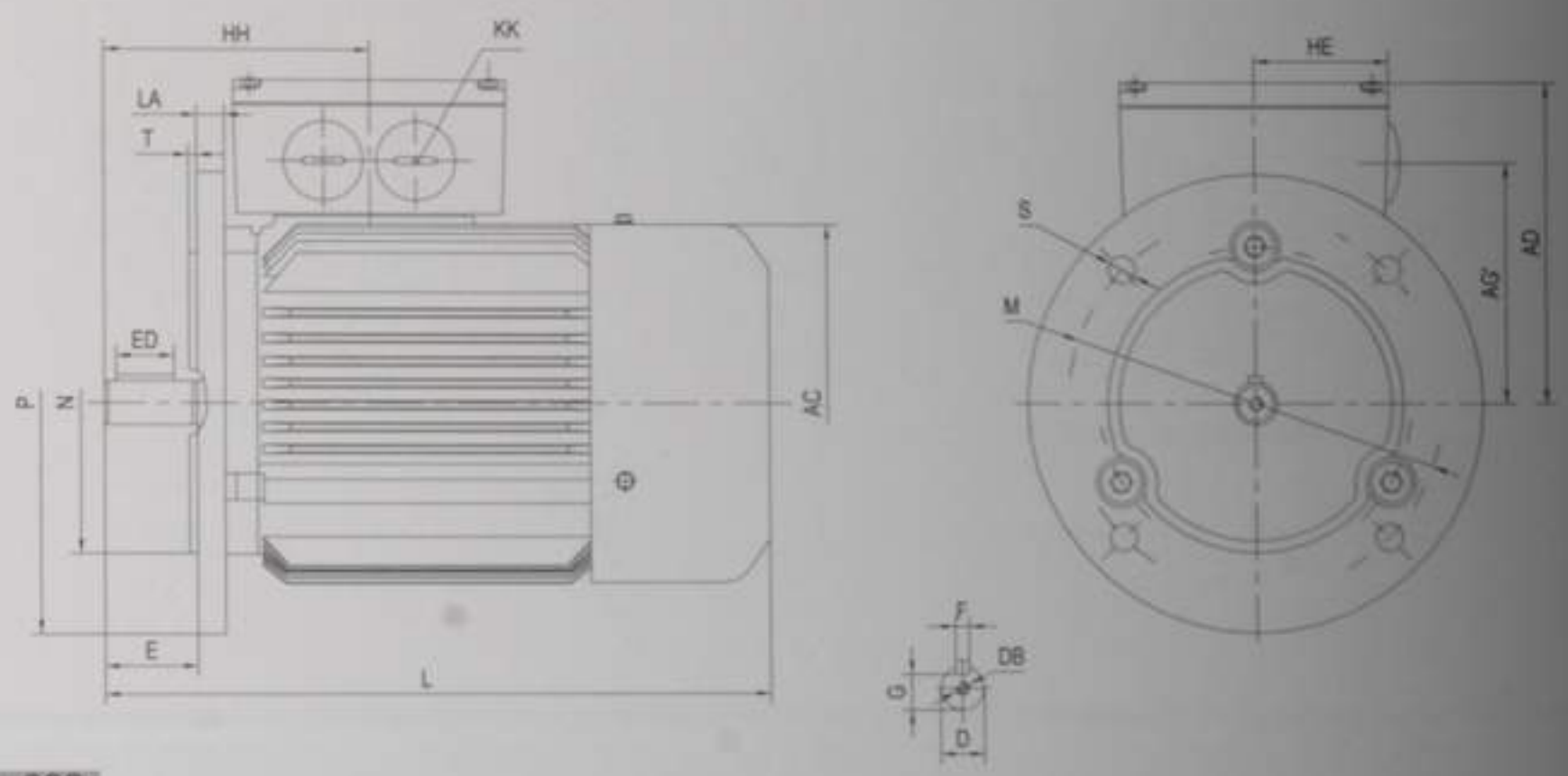

RY2-160~200

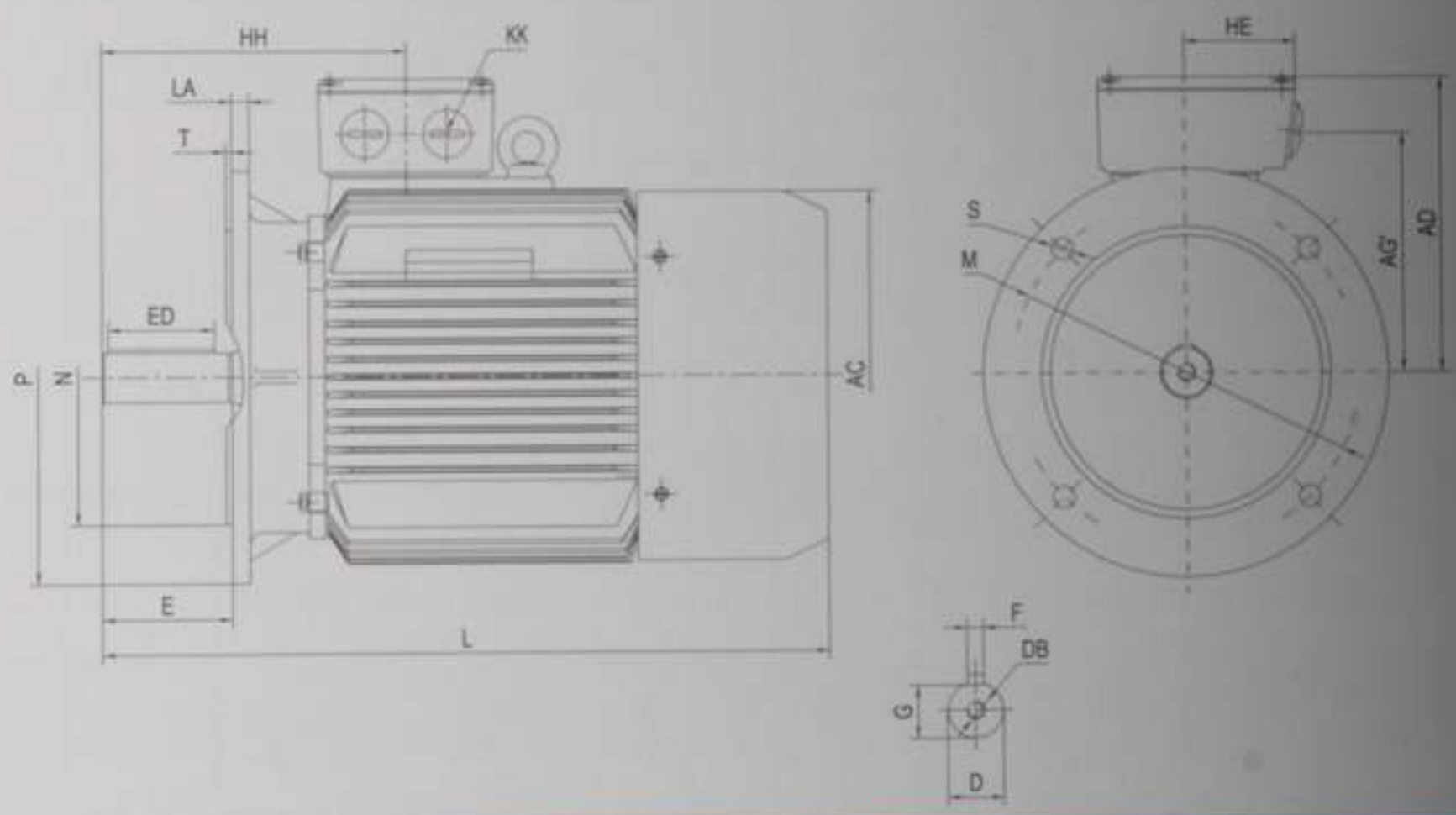

型号 Model	AC	AD	AG'	D	DB	E	ED	F	G	HE	HH	KK	L	LA	M	N	P	S	T
RY2-80	175	145	115	19	M6X16	40	25	6	15.5	59	112	2-M25X1.5	295	12	165	130	200	4×12	3.5
RY2-90S	195	155	125	24	M8X19	50	40	8	20	59	125	2-M25X1.5	320	12	165	130	200	4×12	3.5
RY2-90L	195	155	125	24	M8X19	50	40	8	20	59	125	2-M25X1.5	345	12	165	130	200	4×12	3.5
RY2-100L	215	180	140	28	M10X22	60	45	8	24	59	144	2-M25X1.5	385	12	215	180	250	4×14.5	4
RY2-112M	240	198	162	28	M10X22	60	45	8	24	59	147	2-M32X1.5	400	12	215	180	250	4×14.5	4
RY2-132S	275	218	182	38	M12X28	80	63	10	33	59	179	2-M32X1.5	470	14	265	230	300	4×14.5	4
RY2-132M	275	218	182	38	M12X28	80	63	10	33	59	179	2-M32X1.5	510	14	265	230	300	4×14.5	4
RY2-160M	330	260	215	42	M16x36	110	90	12	37	95	256	2-M40x1.5	615	15	300	250	350	4×18.5	5
RY2-160L	330	260	215	42	M16x36	110	90	12	37	95	256	2-M40x1.5	675	15	300	250	350	4×18.5	5
RY2-180M	380	280	225	48	M16X36	110	90	14	42.5	95	270	2-M40X1.5	700	18	300	250	350	4×18.5	5
RY2-180L	380	280	225	48	M16X36	110	90	14	42.5	95	270	2-M40X1.5	740	18	300	250	350	4×18.5	5
RY2-200L	420	320	254	55	M20X42	110	90	16	49	165	296	2-M50X1.5	770	18	350	300	400	4×18.5	5

RY2外形及安装尺寸—B5 RY2 SERIES DIMENSIONS FLANGE MOUNT B5 IM3001

RY2-225~280

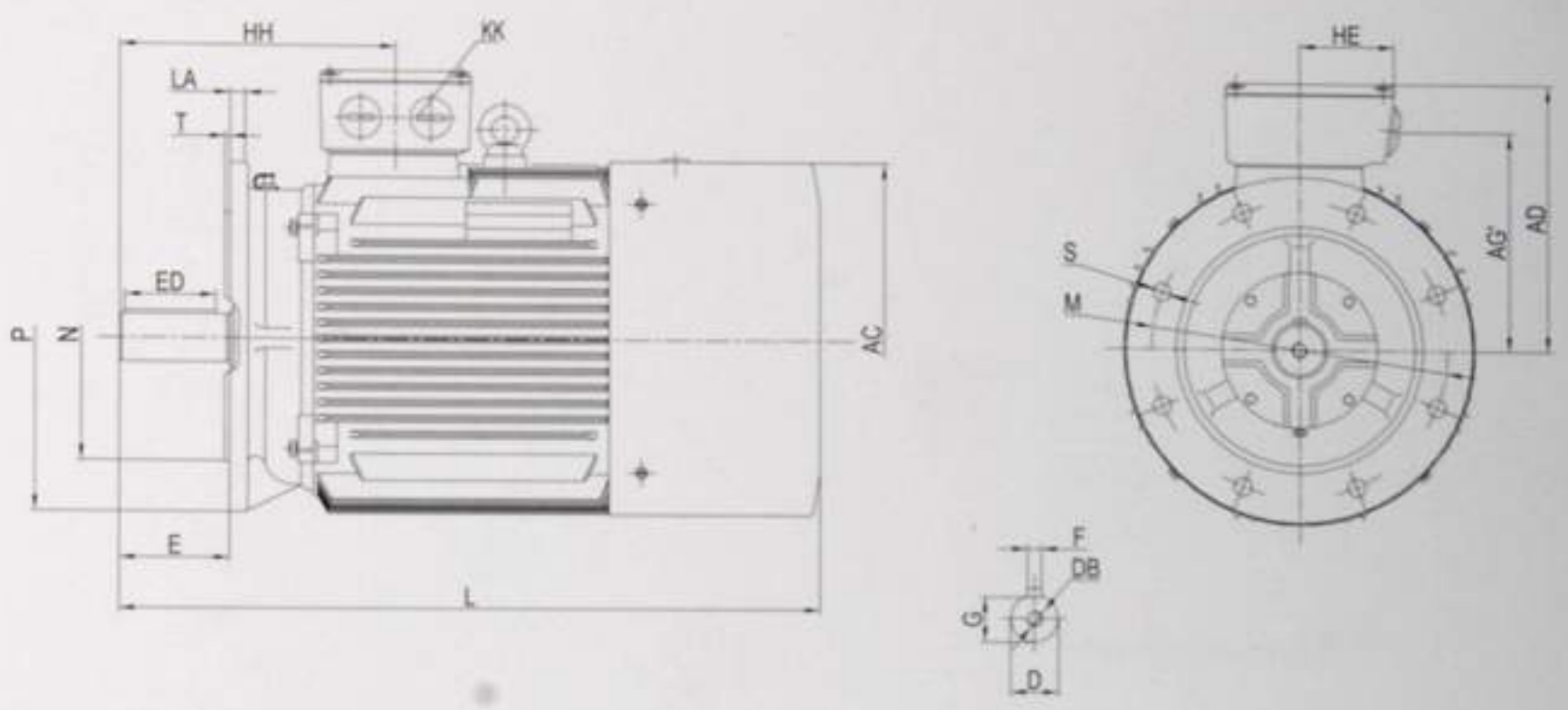

型号 Model	AC	AD	AG'	D	DB	E	ED	F	G	HE	HH	KK	L	LA	M	N	P	S	T
RY2-225S-4,8	470	345	282	60	M20X42	140	110	18	53	165	329	2-M50X1.5	815	20	400	350	450	8×18.5	5
RY2-225M-2	470	345	282	55	M20X42	110	90	16	49	165	299	2-M50X1.5	820	20	400	350	450	8×18.5	5
RY2-225M-4,6,8	470	345	282	60	M20X42	140	110	18	53	165	329	2-M50X1.5	845	20	400	350	450	8×18.5	5
RY2-250M-2	510	370	310	60	M20X42	140	110	18	53	185	349	2-M63X1.5	910	22	500	450	550	8×18.5	5
RY2-250M-4,6,8	510	370	310	65	M20X42	140	110	18	58	185	349	2-M63X1.5	910	22	500	450	550	8×18.5	5
RY2-280S-2	580	410	312	65	M20X42	140	110	18	58	185	356	2-M63X1.5	985	22	500	450	550	8×18.5	5
RY2-280S-4,6,8	580	410	312	75	M20X42	140	110	20	67.5	185	356	2-M63X1.5	985	22	500	450	550	8×18.5	5
RY2-280M-2	580	410	312	65	M20X42	140	110	18	58	185	356	2-M63X1.5	1035	22	500	450	550	8×18.5	5
RY2-280M-4,6,8	580	410	312	75	M20X42	140	110	20	67.5	185	356	2-M63X1.5	1035	22	500	450	550	8×18.5	5

RY2外形及安装尺寸—B35 RY2 SERIES DIMENSIONS FOOT AND FLANGE MOUNT B35 IM2001

RY2-80~132

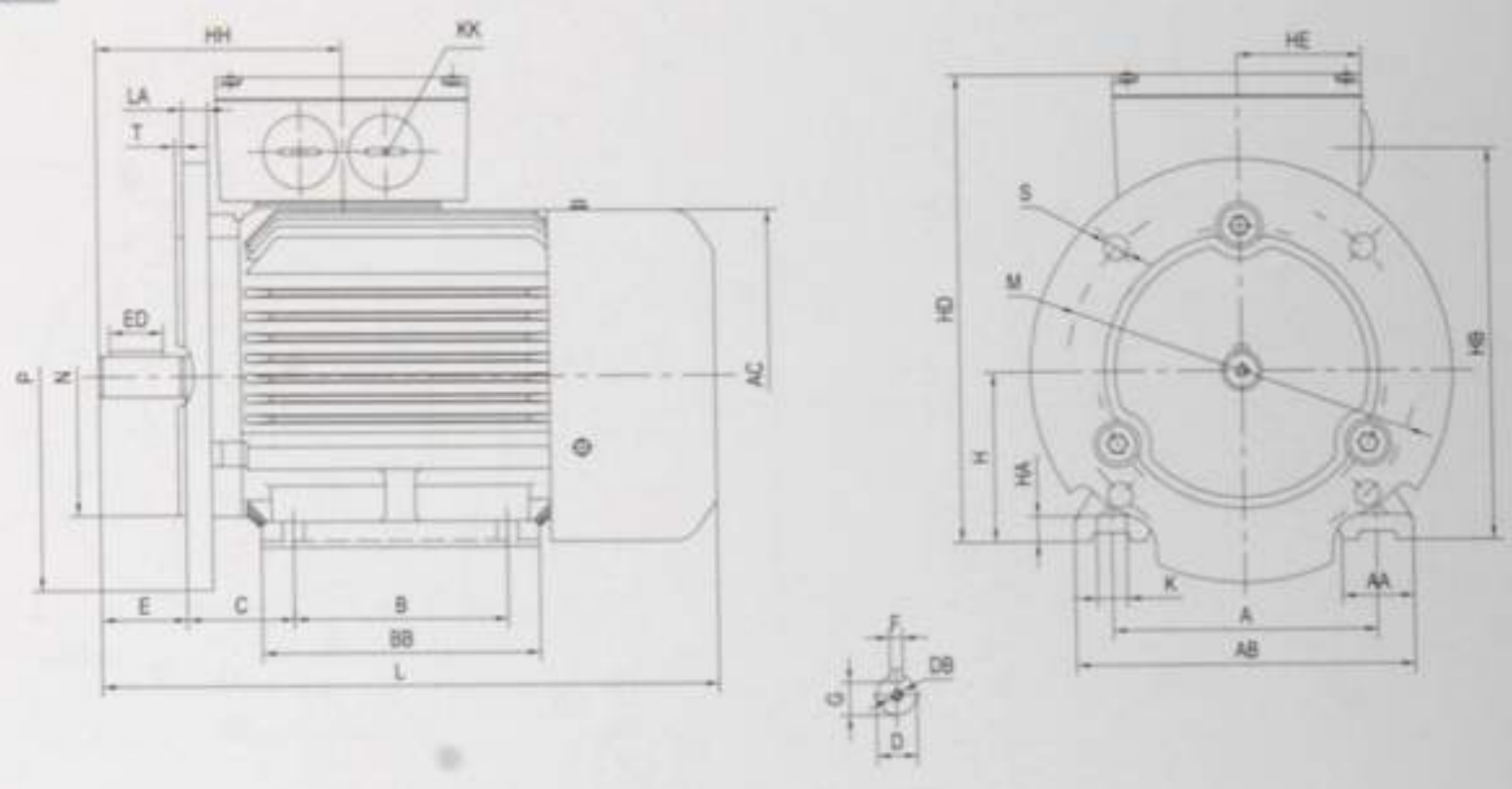

RY2-160~200

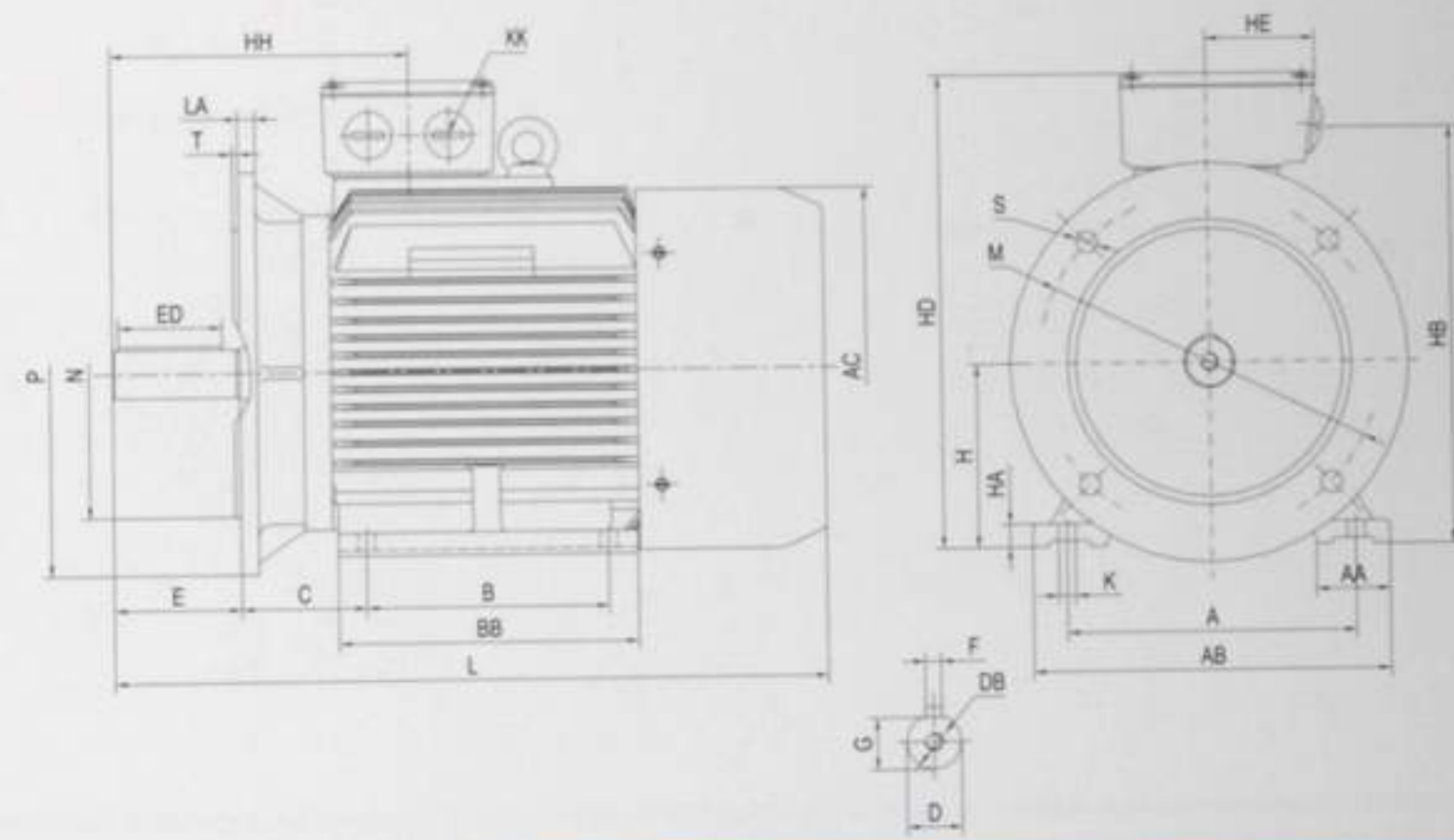

型号 Model	A	AA	AB	AC	B	BB	C	D	DB	E	ED	F	G	H	HA	HB	HD	HE	HH	K	KK	L	LA	M	N	P	S	T
RY2-80	125	34	165	175	100	130	50	19	M6X16	40	25	6	15.5	80	12	195	225	59	112	10	2-M25X1.5	295	12	165	130	200	4×12	3.5
RY2-90S	140	36	180	195	100	140	56	24	M8X19	50	40	8	20	90	12	205	245	59	125	10	2-M25X1.5	320	12	165	130	200	4×12	3.5
RY2-90L	140	36	180	195	125	165	56	24	M8X19	50	40	8	20	90	12	205	245	59	125	10	2-M25X1.5	345	12	165	130	200	4×12	3.5
RY2-100L	160	40	205	215	140	176	63	28	M10X22	60	45	8	24	100	14	228	280	59	144	12	2-M25X1.5	385	12	215	180	250	4×14.5	4
RY2-112M	190	45	230	240	140	180	70	28	M10X22	60	45	8	24	112	13	265	310	59	147	12	2-M32X1.5	400	12	215	180	250	4×14.5	4
RY2-132S	216	55	270	275	140	190	89	38	M12X28	80	63	10	33	132	18	305	350	59	179	12	2-M32X1.5	470	14	265	230	300	4×14.5	4
RY2-132M	216	55	270	275	178	230	89	38	M12X28	80	63	10	33	132	18	305	350	59	179	12	2-M32X1.5	510	14	265	230	300	4×14.5	4
RY2-160M	254	65	320	330	210	260	108	42	M16x36	110	90	12	37	160	20	370	420	95	256	14.5	2-M40x1.5	615	15	300	250	350	4×18.5	5
RY2-160L	254	65	320	330	254	304	108	42	M16x36	110	90	12	37	160	20	370	420	95	256	14.5	2-M40x1.5	675	15	300	250	350	4×18.5	5
RY2-180M	279	70	355	380	241	311	121	48	M16X36	110	90	14	42.5	180	22	405	460	95	270	14.5	2-M40X1.5	700	18	300	250	350	4×18.5	5
RY2-180L	279	70	355	380	279	349	121	48	M16X36	110	90	14	42.5	180	22	405	460	95	270	14.5	2-M40X1.5	740	18	300	250	350	4×18.5	5
RY2-200L	318	70	395	420	305	369	133	55	M20X42	110	90	16	49	200	25	445	520	165	296	18.5	2-M50X1.5	770	18	350	300	400	4×18.5	5

RY2外形及安装尺寸—B35 RY2 SERIES DIMENSIONS FOOT AND FLANGE MOUNT B35 IM2001

RY2-225~280

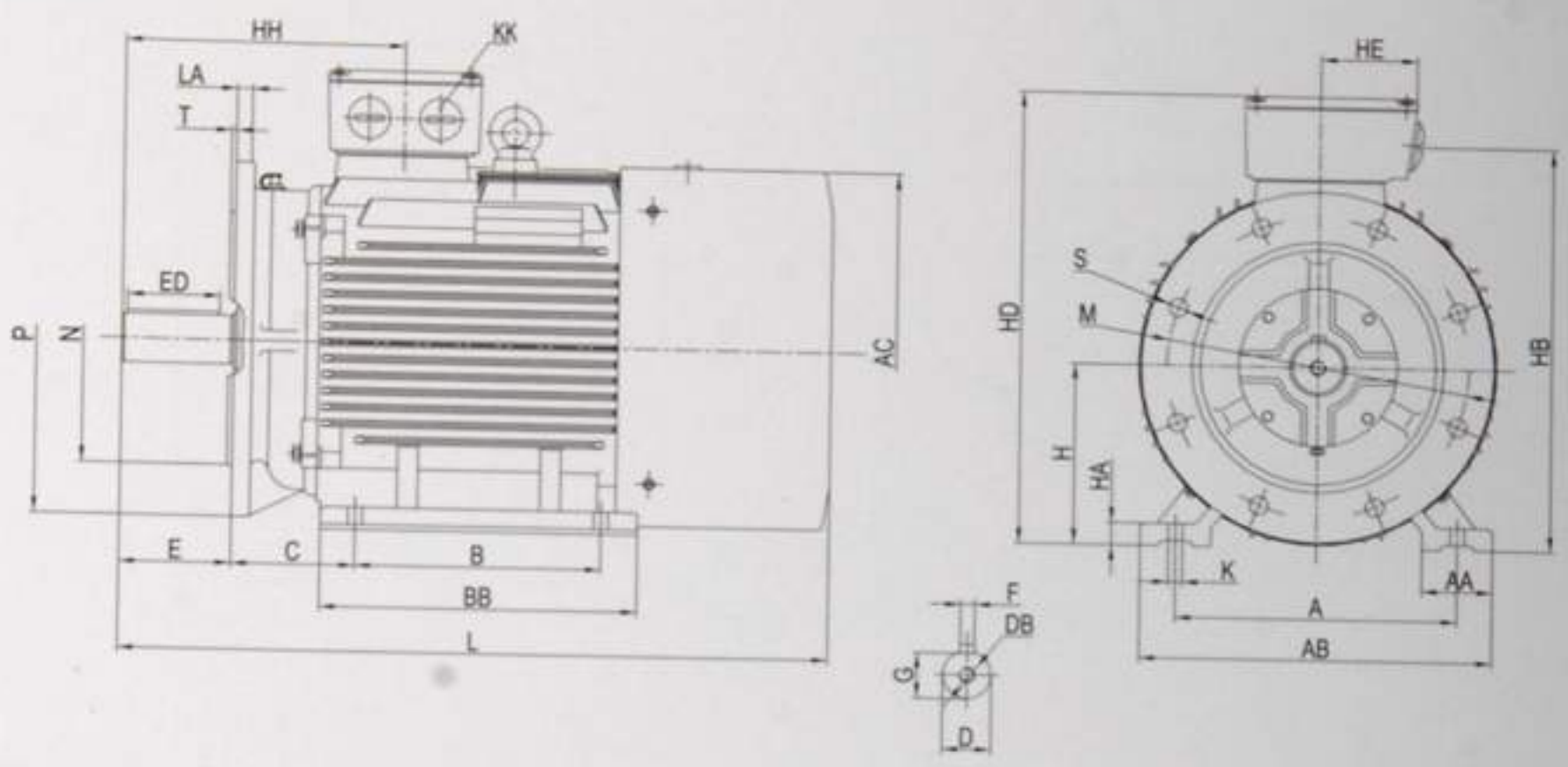

RY2-315

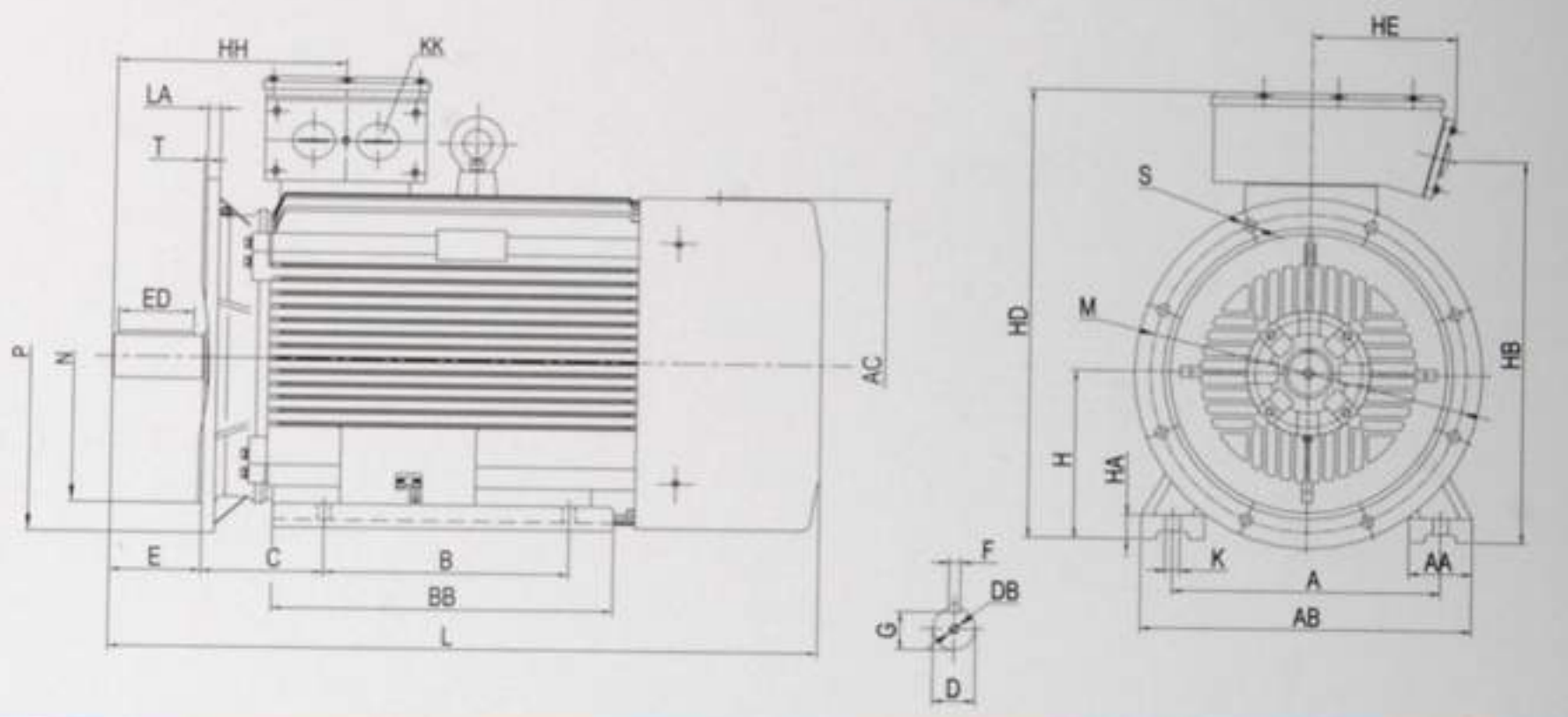

型号 Model	A	AA	AB	AC	B	BB	C	D	DB	E	ED	F	G	H	HA	HB	HD	HE	HH	K	KK	L	LA	M	N	P	S	T
RY2-225S-4,8	356	75	435	470	286	368	149	60	M20X42	140	110	18	53	225	28	507	570	165	329	18.5	2-M50X1.5	815	20	400	350	450	8×18.5	5
RY2-225M-2	356	75	435	470	311	393	149	55	M20X42	110	90	16	49	225	28	507	570	165	299	18.5	2-M50X1.5	820	20	400	350	450	8×18.5	5
RY2-225M-4,6,8	356	75	435	470	311	393	149	60	M20X42	140	110	18	53	225	28	507	570	165	329	18.5	2-M50X1.5	845	20	400	350	450	8×18.5	5
RY2-250M-2	406	80	490	510	349	445	168	60	M20X42	140	110	18	53	250	30	560	620	185	349	24	2-M63X1.5	910	22	500	450	550	8×18.5	5
RY2-250M-4,6,8	406	80	490	510	349	445	168	65	M20X42	140	110	18	58	250	30	560	620	185	349	24	2-M63X1.5	910	22	500	450	550	8×18.5	5
RY2-280S-2	457	85	550	580	368	485	190	65	M20X42	140	110	18	58	280	35	600	690	185	356	24	2-M63X1.5	985	22	500	450	550	8×18.5	5
RY2-280S-4,6,8	457	85	550	580	368	485	190	75	M20X42	140	110	20	67.5	280	35	600	690	185	356	24	2-M63X1.5	985	22	500	450	550	8×18.5	5
RY2-280M-2	457	85	550	580	419	536	190	65	M20X42	140	110	18	58	280	35	600	690	185	356	24	2-M63X1.5	1035	22	500	450	550	8×18.5	5
RY2-280M-4,6,8	457	85	550	580	419	536	190	75	M20X42	140	110	20	67.5	280	35	600	690	185	356	24	2-M63X1.5	1035	22	500	450	550	8×18.5	5
RY2-315S-2	508	120	635	645	406	570	216	65	M24x42	140	125	18	58	315	45	755	865	245	397	28	2-M63X1.5	1160	24	600	550	660	8×24	6
RY2-315S-4,6,8,10	508	120	635	645	406	680	216	80	M24x42	170	160	22	71	315	45	755	865	245	427	28	2-M63X1.5	1270	24	600	550	660	8×24	6
RY2-315M-2	508	120	635	645	457	680	216	65	M24x42	140	110	18	58	315	45	755	865	245	397	28	2-M63X1.5	1190	24	600	550	660	8×24	6
RY2-315M-4,6,8,10	508	120	635	645	457	680	216	80	M24x42	170	140	22	71	315	45	755	865	245	427	28	2-M63X1.5	1300	24	600	550	660	8×24	6
RY2-315L-2	508	120	635	645	508	680	216	65	M24x42	140	110	18	58	315	45	755	865	245	397	28	2-M63X1.5	1190	24	600	550	660	8×24	6
RY2-315L-4,6,8,10	508	120	635	645	508	680	216	80	M24x42	170	140	22	71	315	45	755	865	245	427	28	2-M63X1.5	1300	24	600	550	660	8×24	6

RY2外形及安装尺寸—B35 RY2 SERIES DIMENSIONS FOOT AND FLANGE MOUNT B35 IM2001

RY2-355

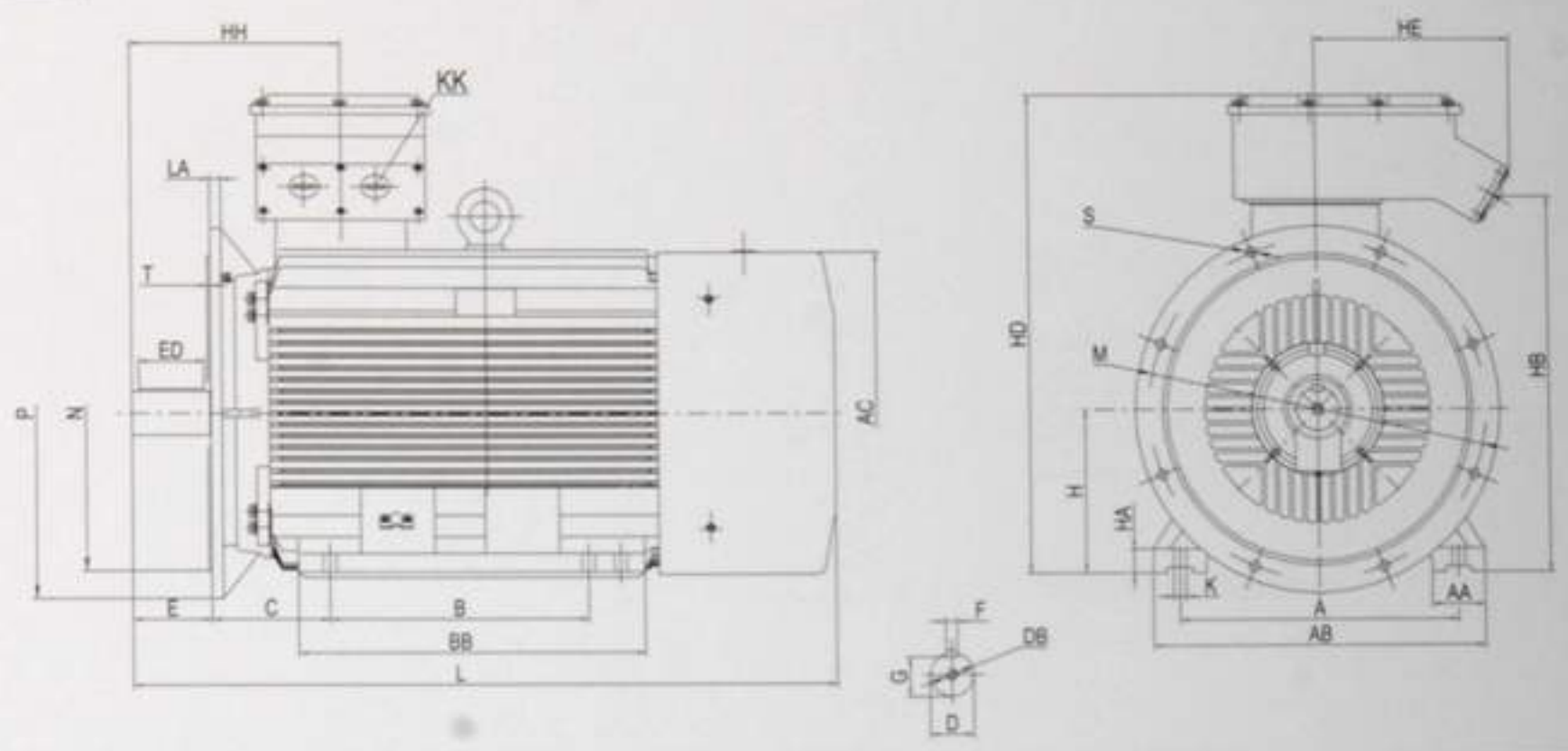

型号 Model	A	AA	AB	AC	B	BB	C	D	DB	E	ED	F	G	H	HA	HB	HD	HE	HH	K	KK	L	LA	M	N	P	S	T
RY2-355M-2	610	116	730	710	560	750	254	75	M24x42	140	110	20	67.5	355	52	906	1040	245	424	28	2-M63X1.5	1500	24	740	680	800	8×24	6
RY2-355M-4,6,8,10	610	116	730	710	560	750	254	95	M24x42	170	140	25	86	355	52	906	1040	245	454	28	2-M63X1.5	1530	24	740	680	800	8×24	6
RY2-355L-2	610	116	730	710	630	750	254	75	M24x42	140	110	20	67.5	355	52	906	1040	245	424	28	2-M63X1.5	1500	24	740	680	800	8×24	6
RY2-355L-4,6,8,10	610	116	730	710	630	750	254	95	M24x42	170	140	25	86	355	52	906	1040	245	454	28	2-M63X1.5	1530	24	740	680	800	8×24	6

RY2外形及安装尺寸—V1 RY2 SERIES DIMENSIONS FLANGE MOUNT V1 IM3011

RY2-80~132

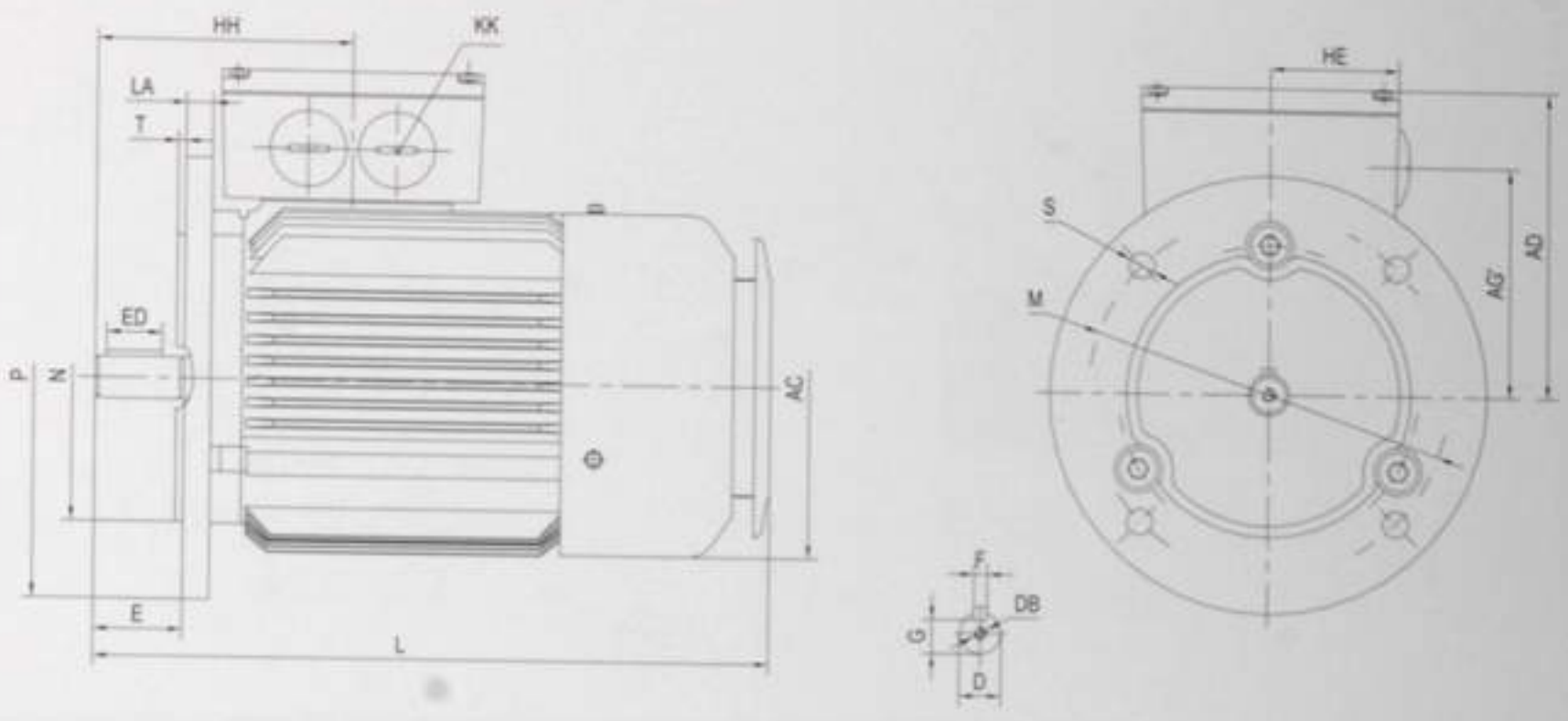

RY2-160~200

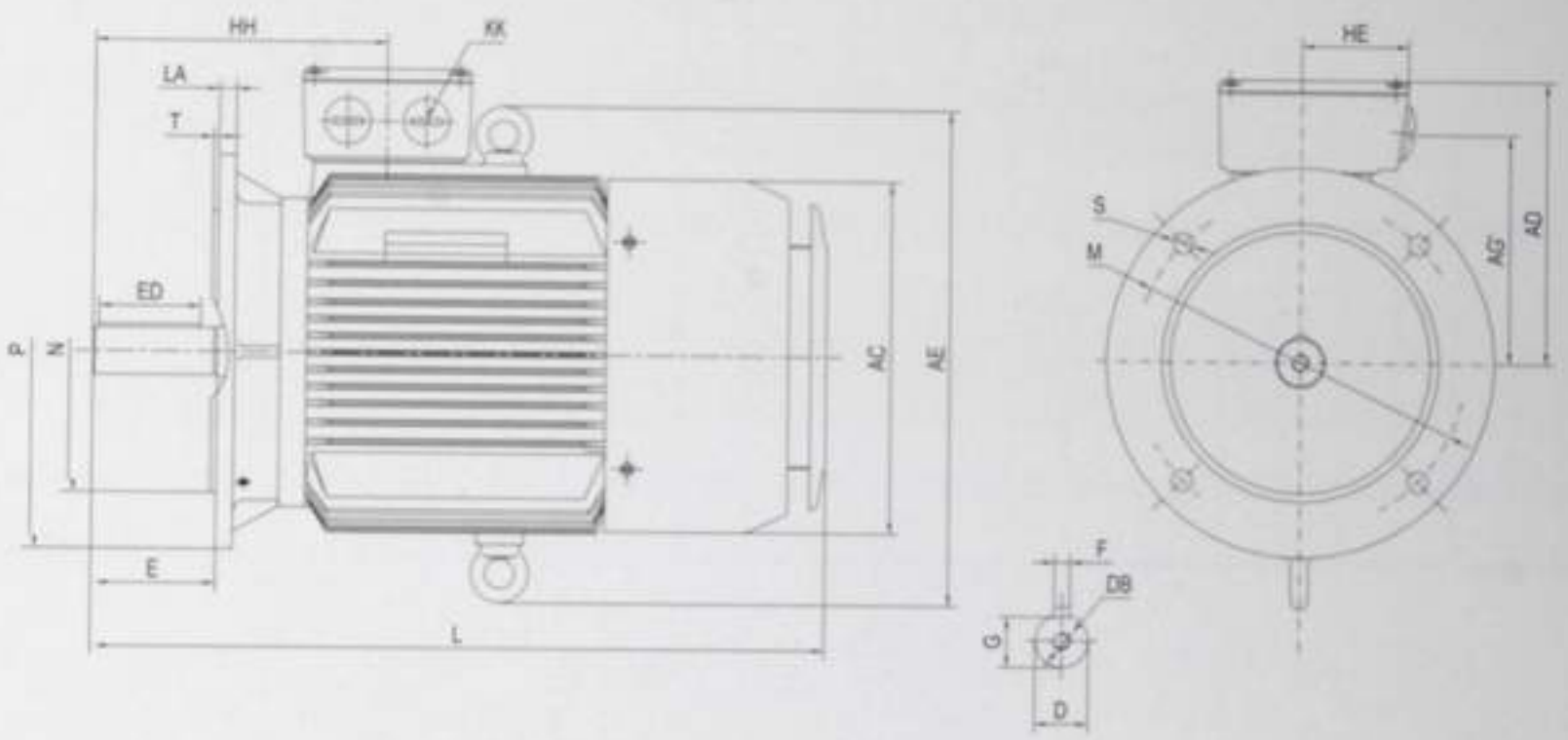

机座号 FRAME	AC	AD	AE	AG'	D	DB	E	ED	F	G	HE	HH	KK	L	LA	M	N	P	S	T
RY2-80	175	145		115	19	M6X16	40	25	6	15.5	59	112	2-M25X1.5	351	12	165	130	200	4×12	3.5
RY2-90S	195	155		125	24	M8X19	50	40	8	20	59	125	2-M25X1.5	375	12	165	130	200	4×12	3.5
RY2-90L	195	155		125	24	M8X19	50	40	8	20	59	125	2-M25X1.5	400	12	165	130	200	4×12	3.5
RY2-100L	215	180	280	140	28	M10X22	60	45	8	24	59	144	2-M25X1.5	440	12	215	180	250	4×14.5	4
RY2-112M	240	198	300	162	28	M10X22	60	45	8	24	59	147	2-M32X1.5	465	12	215	180	250	4×14.5	4
RY2-132S	275	218	360	182	38	M12X28	80	63	10	33	59	179	2-M32X1.5	535	14	265	230	300	4×14.5	4
RY2-132M	275	218	360	182	38	M12X28	80	63	10	33	59	179	2-M32X1.5	575	14	265	230	300	4×14.5	4
RY2-160M	330	260	440	215	42	M16x36	110	90	12	37	95	256	2-M40x1.5	690	15	300	250	350	4×18.5	5
RY2-160L	330	260	440	215	42	M16x36	110	90	12	37	95	256	2-M40x1.5	750	15	300	250	350	4×18.5	5
RY2-180M	380	280	470	225	48	M16X36	110	90	14	42.5	95	270	2-M40X1.5	775	18	300	250	350	4×18.5	5
RY2-180L	380	280	470	225	48	M16X36	110	90	14	42.5	95	270	2-M40X1.5	815	18	300	250	350	4×18.5	5
RY2-200L	420	320	530	254	55	M20X42	110	90	16	49	165	296	2-M50X1.5	845	18	350	300	400	4×18.5	5

RY2外形及安装尺寸—V1 RY2 SERIES DIMENSIONS FLANGE MOUNT V1 IM3011

RY2-225~280

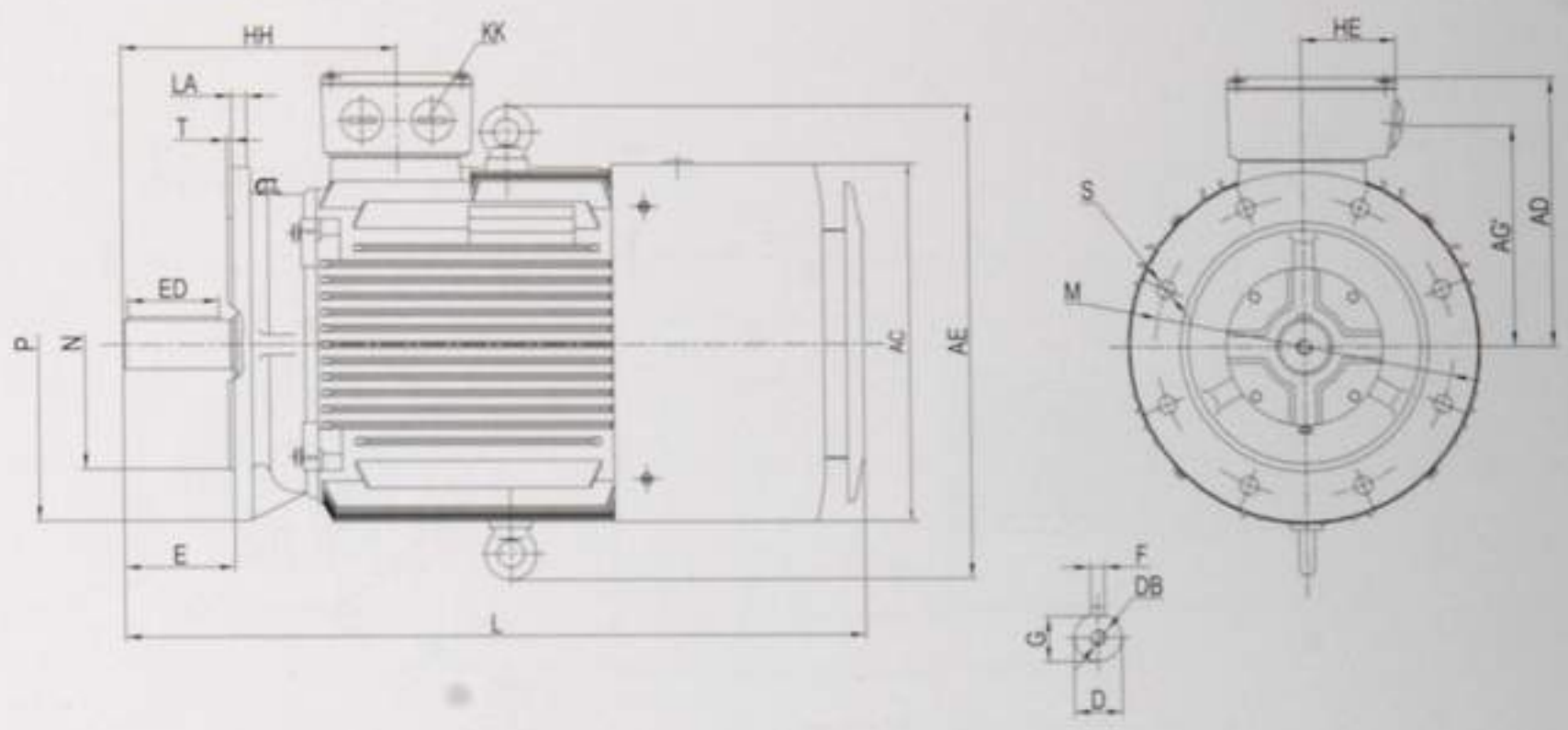

RY2-315

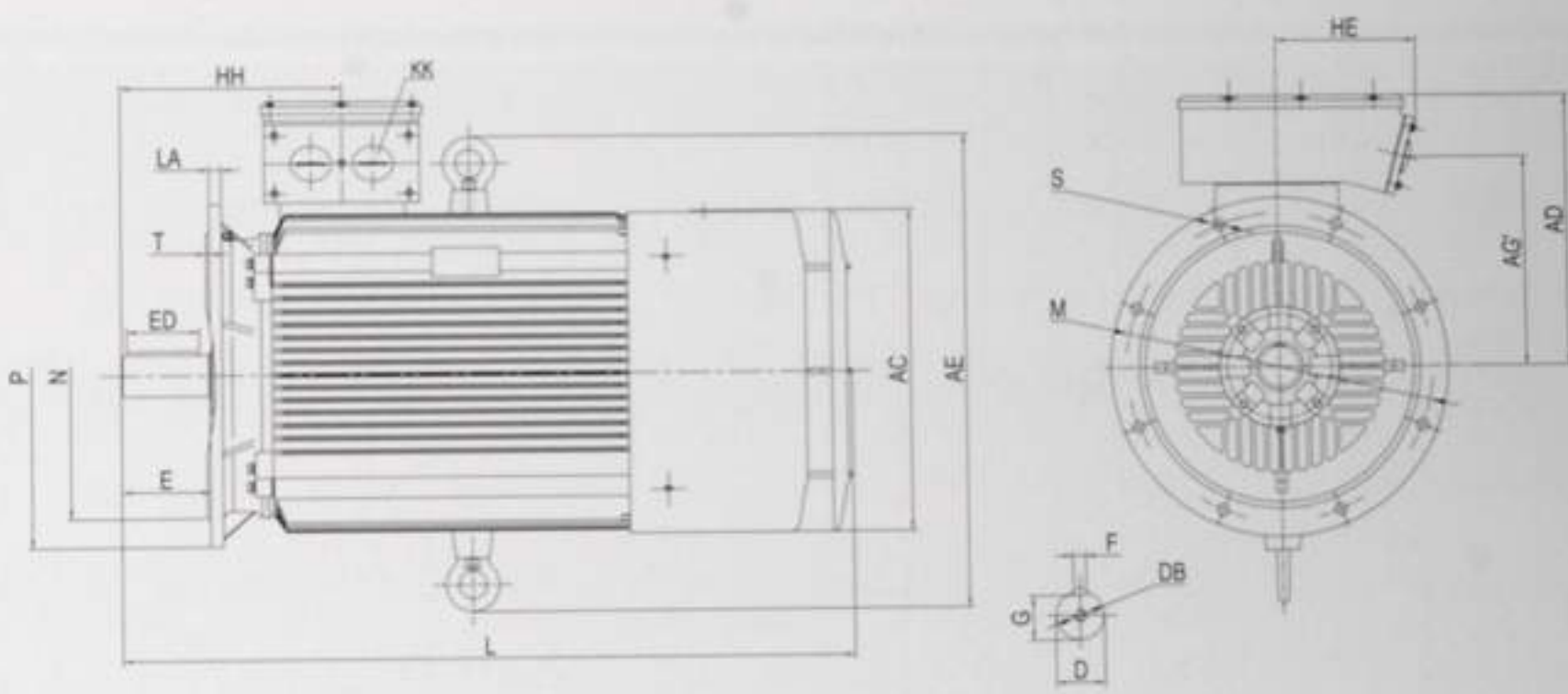

机座号 FRAME	AC	AD	AE	AG'	D	DB	E	ED	F	G	HE	HH	KK	L	LA	M	N	P	S	T
RY2-225S-4,8	470	345	575	282	60	M20X42	140	110	18	53	165	329	2-M50X1.5	890	20	400	350	450	8×18.5	5
RY2-225M-2	470	345	575	282	55	M20X42	110	90	16	49	165	299	2-M50X1.5	895	20	400	350	450	8×18.5	5
RY2-225M-4,6,8	470	345	575	282	60	M20X42	140	110	18	53	165	329	2-M50X1.5	920	20	400	350	450	8×18.5	5
RY2-250M-2	510	370	635	310	60	M20X42	140	110	18	53	185	349	2-M63X1.5	1000	22	500	450	550	8×18.5	5
RY2-250M-4,6,8	510	370	635	310	65	M20X42	140	110	18	58	185	349	2-M63X1.5	1000	22	500	450	550	8×18.5	5
RY2-280S-2	580	410	740	312	65	M20X42	140	110	18	58	185	356	2-M63X1.5	1075	22	500	450	550	8×18.5	5
RY2-280S-4,6,8	580	410	740	312	75	M20X42	140	110	20	67.5	185	356	2-M63X1.5	1075	22	500	450	550	8×18.5	5
RY2-280M-2	580	410	740	312	65	M20X42	140	110	18	58	185	356	2-M63X1.5	1125	22	500	450	550	8×18.5	5
RY2-280M-4,6,8	580	410	740	312	75	M20X42	140	110	20	67.5	185	356	2-M63X1.5	1125	22	500	450	550	8×18.5	5
RY2-315S-2	645	550	870	408	65	M24x42	140	125	18	58	245	397	2-M63X1.5	1250	24	600	550	660	8×24	6
RY2-315S-4,6,8,10	645	550	870	408	80	M24x42	170	160	22	71	245	427	2-M63X1.5	1360	24	600	550	660	8×24	6
RY2-315M-2	645	550	870	408	65	M24x42	140	110	18	58	245	397	2-M63X1.5	1280	24	600	550	660	8×24	6
RY2-315M-4,6,8,10	645	550	870	408	80	M24x42	170	140	22	71	245	427	2-M63X1.5	1390	24	600	550	660	8×24	6
RY2-315L-2	645	550	870	408	65	M24x42	140	110	18	58	245	397	2-M63X1.5	1280	24	600	550	660	8×24	6
RY2-315L-4,6,8,10	645	550	870	408	80	M24x42	170	140	22	71	245	427	2-M63X1.5	1390	24	600	550	660	8×24	6

RY2外形及安装尺寸—V1

RY2 SERIES DIMENSIONS FLANGE MOUNT V1 IM3011

RY2-355

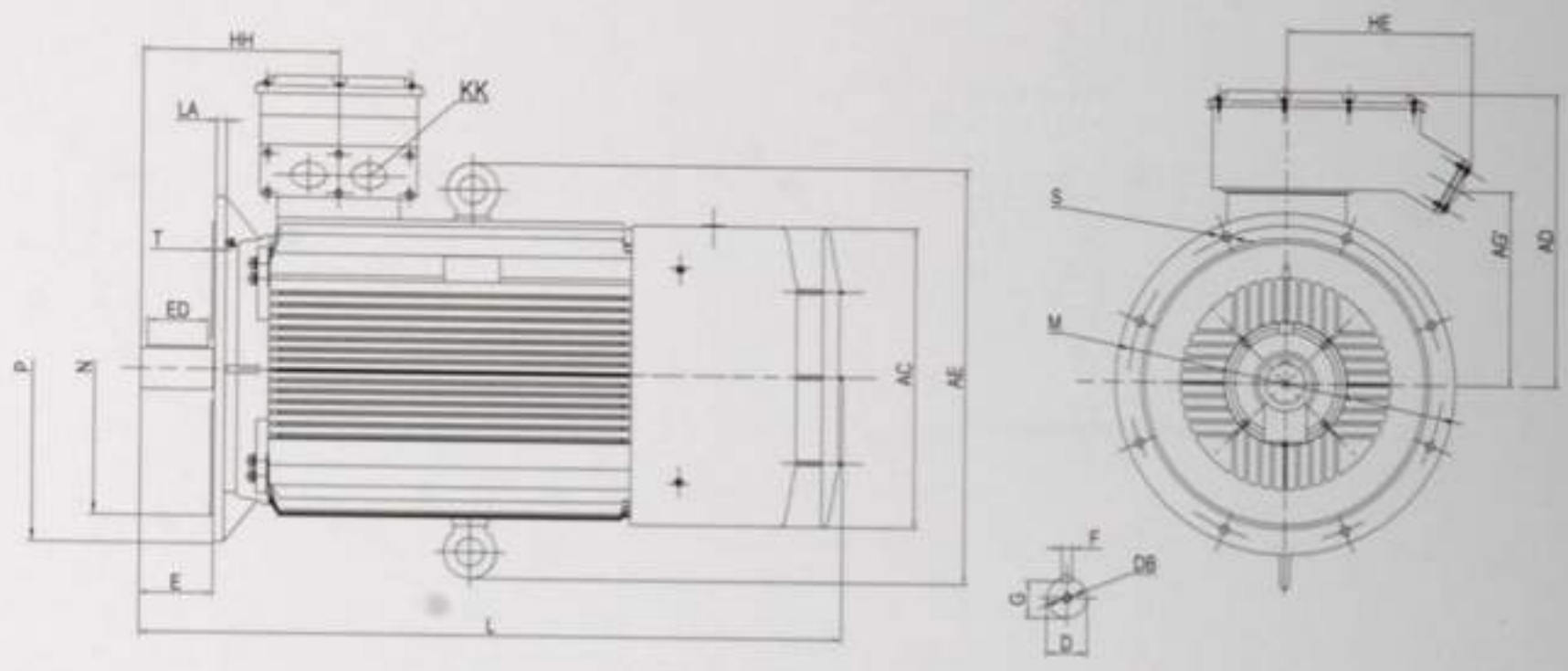

机座号 FRAME	AC	AD	AE	AG'	D	DB	E	ED	F	G	HE	HH	KK	L	LA	M	N	P	S	T
RY2-315S-2	645	550	870	408	65	M24x42	140	125	18	58	245	397	2-M63X1.5	1250	24	600	550	660	8×24	6
RY2-315S-4,6,8,10	645	550	870	408	80	M24x42	170	160	22	71	245	427	2-M63X1.5	1360	24	600	550	660	8×24	6
RY2-315M-2	645	550	870	408	65	M24x42	140	110	18	58	245	397	2-M63X1.5	1280	24	600	550	660	8×24	6
RY2-315M-4,6,8,10	645	550	870	408	80	M24x42	170	140	22	71	245	427	2-M63X1.5	1390	24	600	550	660	8×24	6
RY2-315L-2	645	550	870	408	65	M24x42	140	110	18	58	245	397	2-M63X1.5	1280	24	600	550	660	8×24	6
RY2-315L-4,6,8,10	645	550	870	408	80	M24x42	170	140	22	71	245	427	2-M63X1.5	1390	24	600	550	660	8×24	6
RY2-355M-2	710	685	983	549	75	M24x42	140	110	20	67.5	245	424	2-M63X1.5	1590	24	740	680	800	8×24	6
RY2-355M-4,6,8,10	710	685	983	549	95	M24x42	170	140	25	86	245	454	2-M63X1.5	1620	24	740	680	800	8×24	6
RY2-355L-2	710	685	983	549	75	M24x42	140	110	20	67.5	245	424	2-M63X1.5	1590	24	740	680	800	8×24	6
RY2-355L-4,6,8,10	710	685	983	549	95	M24x42	170	140	25	86	245	454	2-M63X1.5	1630	24	740	680	800	8×24	6

RY2外形及安装尺寸—B3 右出线 RY2 SERIES DIMENSIONS FOOT MOUNT B3 IM1001-T/Box RHS

RY2-80-132

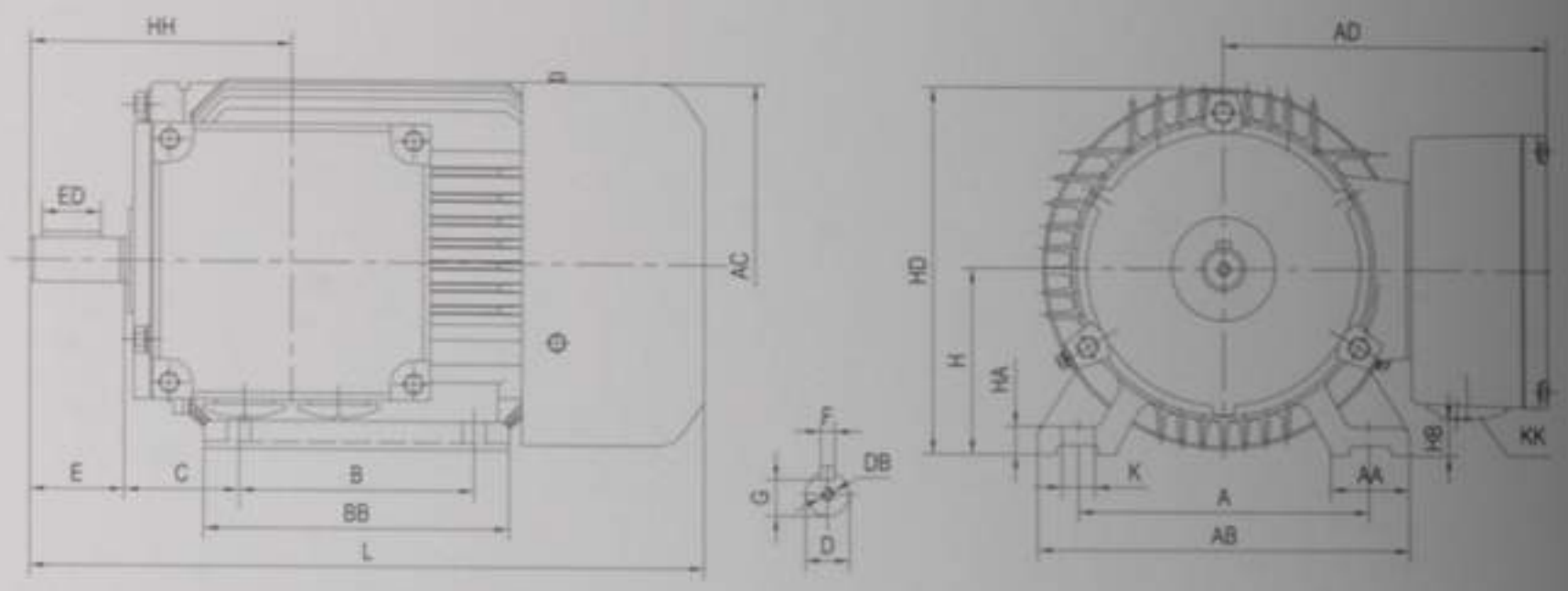

RY2-160-200

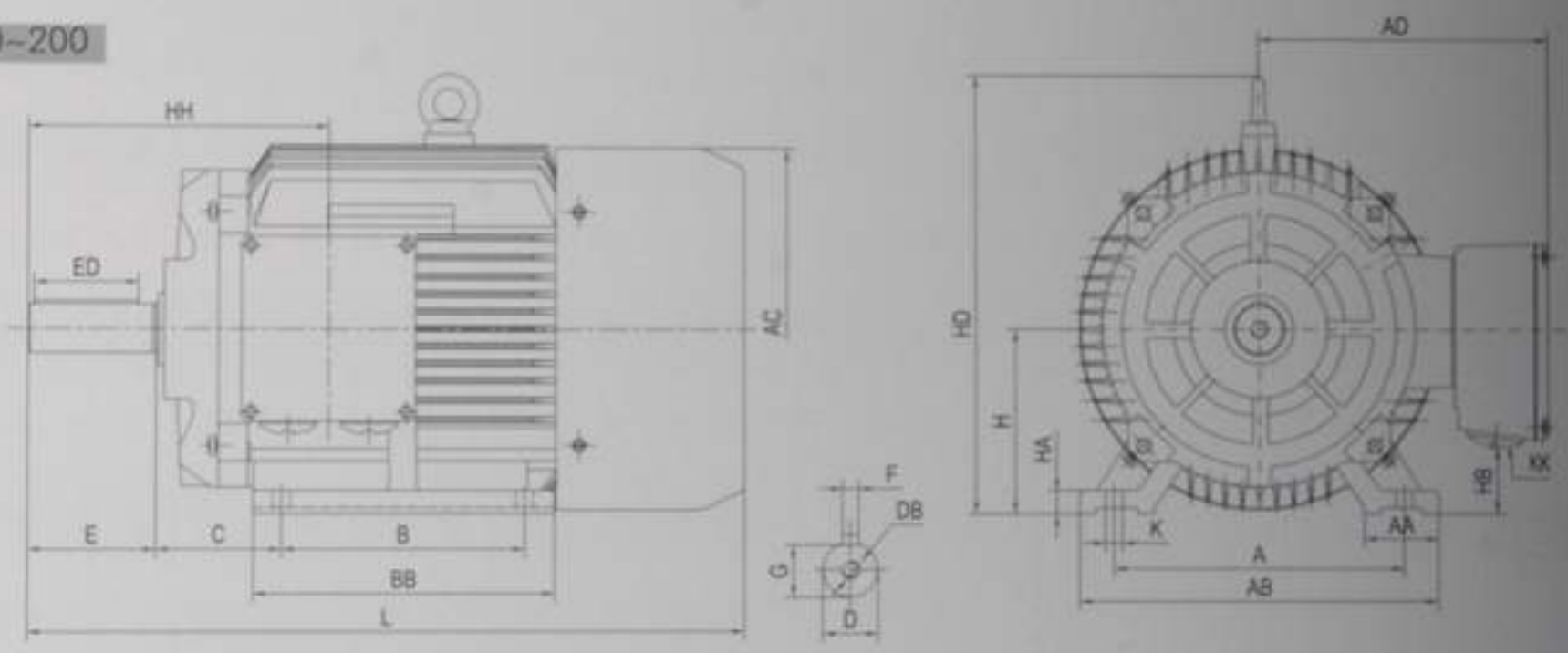

机座号 FRAME	A	AA	AB	AC	AD	B	BB	C	D	DB	E	ED	F	G	H	HA	HD	HB	HH	K	KK	L
RY2-80	125	34	165	175	145	100	130	50	19	M6X16	40	25	6	15.5	80	12	158	20	112	10	2-M25X1.5	295
RY2-90S	140	36	180	195	155	100	140	56	24	M8X19	50	40	8	20	90	12	175	30	125	10	2-M25X1.5	320
RY2-90L	140	36	180	195	155	125	165	56	24	M8X19	50	40	8	20	90	12	175	30	125	10	2-M25X1.5	345
RY2-100L	160	40	205	215	180	140	176	63	28	M10X22	60	45	8	24	100	14	239	40	144	12	2-M25X1.5	385
RY2-112M	190	45	230	240	190	140	180	70	28	M10X22	60	45	8	24	112	13	263	43	147	12	2-M32X1.5	400
RY2-132S	216	55	270	275	210	140	190	89	38	M12X28	80	63	10	33	132	18	311	53	179	12	2-M32X1.5	470
RY2-132M	216	55	270	275	210	178	230	89	38	M12X28	80	63	10	33	132	18	311	53	179	12	2-M32X1.5	510
RY2-160M	254	65	320	330	255	210	260	108	42	M16x36	110	90	12	37	160	20	381	45	256	15	2-M40x1.5	615
RY2-160L	254	65	320	330	255	254	304	108	42	M16x36	110	90	12	37	160	20	381	45	256	15	2-M40x1.5	670
RY2-180M	279	70	355	380	280	241	311	121	48	M16X36	110	90	14	42.5	180	22	417	80	270	14.5	2-M40X1.5	700
RY2-180L	279	70	355	380	280	279	349	121	48	M16X36	110	90	14	42.5	180	22	417	80	270	14.5	2-M40X1.5	740
RY2-200L	318	70	395	420	305	305	369	133	55	M20X42	110	90	16	49	200	25	462	82	306	18.5	2-M50X1.5	770

RY2外形及安装尺寸—B3 右出线 RY2 SERIES DIMENSIONS FOOT MOUNT B3 IM1001-T/Box RHS

RY2-225~280

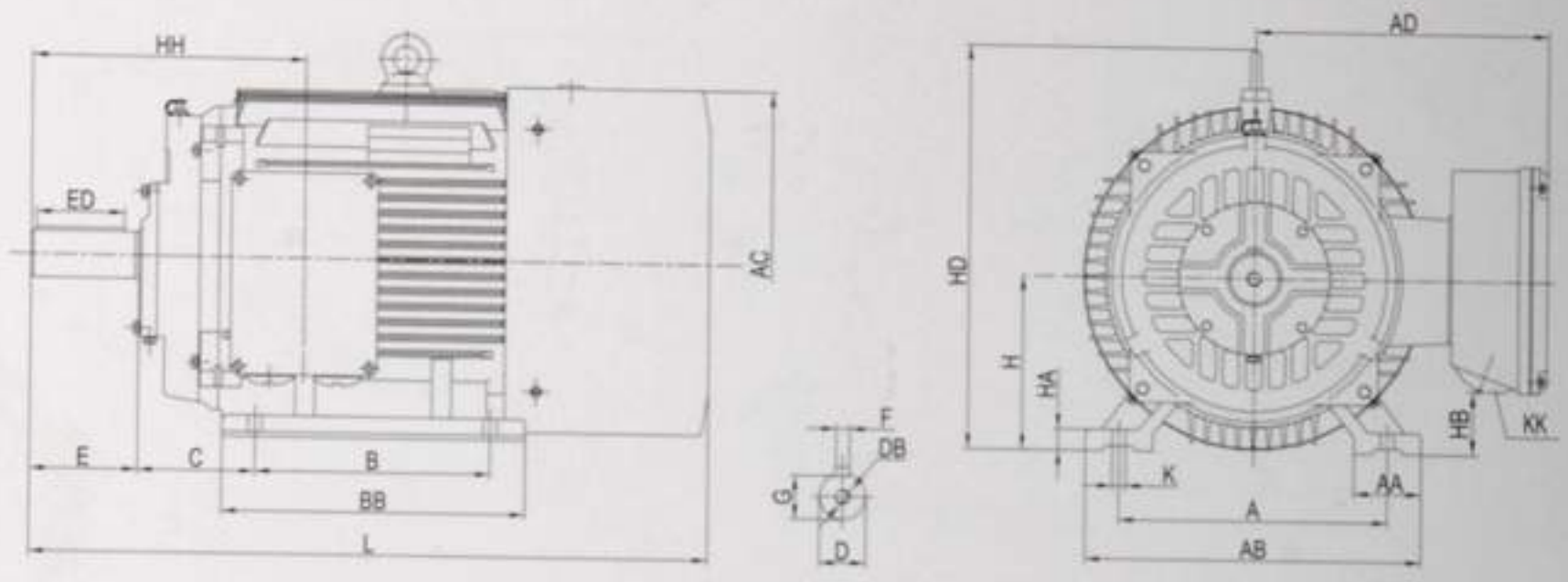

机座号 FRAME	A	AA	AB	AC	AD	B	BB	C	D	DB	E	ED	F	G	H	HA	HD	HB	HH	K	KK	L
RY2-225S-4,8	356	75	435	470	335	286	368	149	60	M20X42	140	110	18	53	225	28	518	105	329	18.5	2-M50X1.5	815
RY2-225M-2	356	75	435	470	335	311	393	149	55	M20X42	110	90	16	49	225	28	518	105	299	18.5	2-M50X1.5	820
RY2-225M-4,6,8	356	75	435	470	335	311	393	149	60	M20X42	140	110	18	53	225	28	518	105	329	18.5	2-M50X1.5	845
RY2-250M-2	406	80	490	510	370	349	445	168	60	M20X42	140	110	18	53	250	30	566	102	349	24	2-M63X1.5	910
RY2-250M-4,6,8	406	80	490	510	370	349	445	168	65	M20X42	140	110	18	58	250	30	566	102	349	24	2-M63X1.5	910
RY2-280S-2	457	85	550	580	410	368	485	190	65	M20X42	140	110	18	58	280	35	648	132	356	24	2-M63X1.5	985
RY2-280S-4,6,8	457	85	550	580	410	368	485	190	75	M20X42	140	110	20	67.5	280	35	648	132	356	24	2-M63X1.5	985
RY2-280M-2	457	85	550	580	410	419	536	190	65	M20X42	140	110	18	58	280	35	648	132	356	24	2-M63X1.5	1035
RY2-280M-4,6,8	457	85	550	580	410	419	536	190	75	M20X42	140	110	20	67.5	280	35	648	132	356	24	2-M63X1.5	1035

RY2外形及安装尺寸—B3 右出线 RY2 SERIES DIMENSIONS FOOT MOUNT B3 IM1001-T/Box RHS

RY2-315

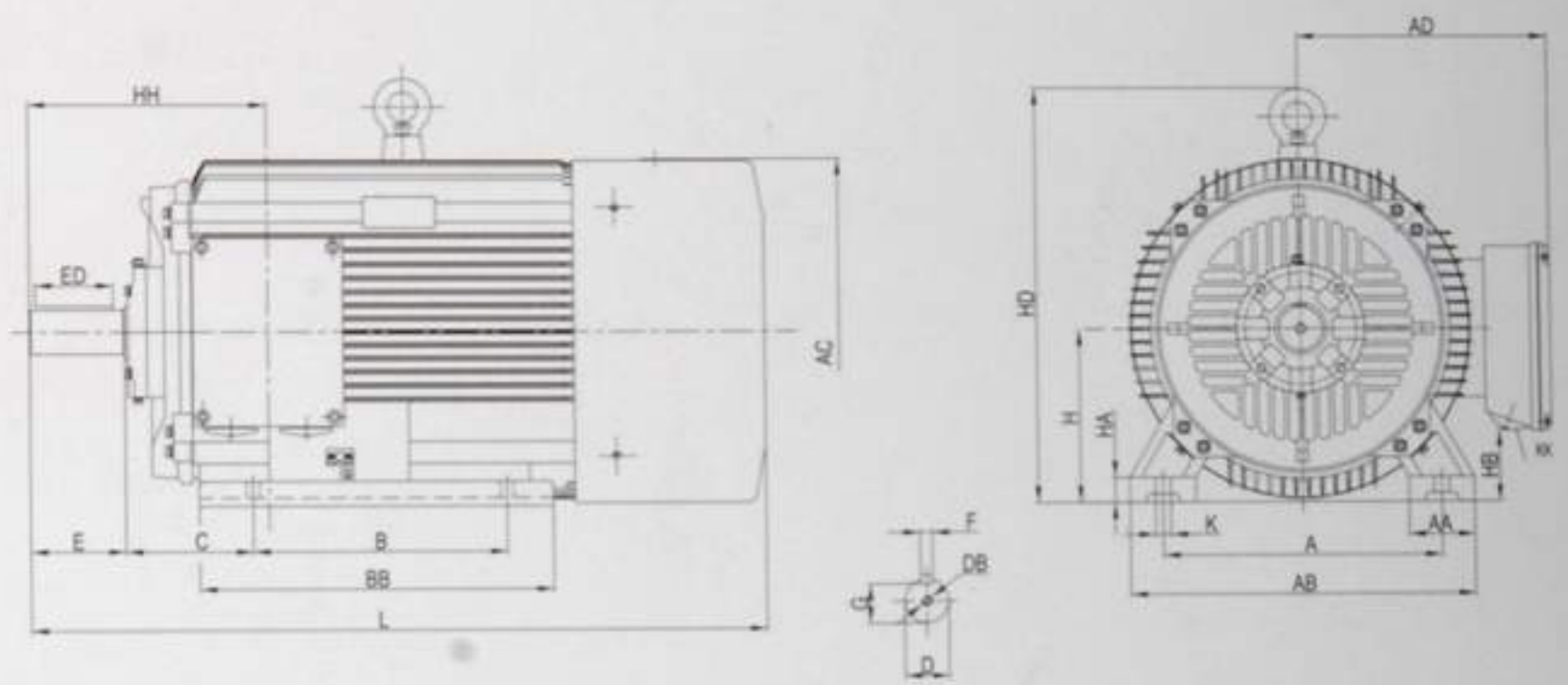

RY2-355

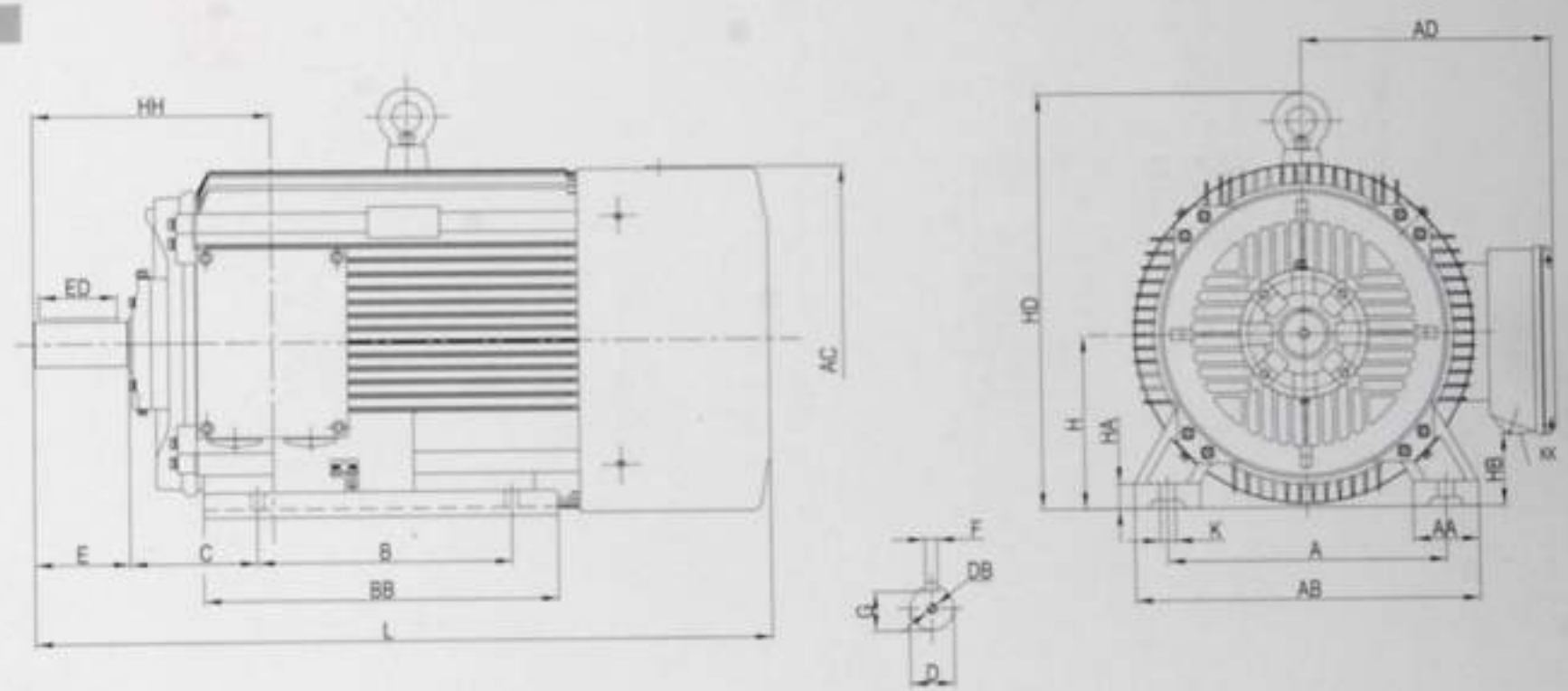

机座号 FRAME	A	AA	AB	AC	AD	B	BB	C	D	DB	E	ED	F	G	H	HA	HD	HB	HH	K	KK	L
RY2-315S-2	508	120	635	645	530	406	570	216	65	M24x42	140	110	18	58	315	45	745	120	397	28	2-M63X1.5	1160
RY2-315S-4,6,8,10	508	120	635	645	530	406	570	216	80	M24x42	170	140	22	71	315	45	745	120	427	28	2-M63X1.5	1270
RY2-315M-2	508	120	635	645	530	457	680	216	65	M24x42	140	110	18	58	315	45	745	120	397	28	2-M63X1.5	1190
RY2-315M-4,6,8,10	508	120	635	645	530	457	680	216	80	M24x42	170	140	22	71	315	45	745	120	427	28	2-M63X1.5	1300
RY2-315L-2	508	120	635	645	530	508	680	216	65	M24x42	140	110	18	58	315	45	745	120	397	28	2-M63X1.5	1190
RY2-315L-4,6,8,10	508	120	635	645	530	508	680	216	80	M24x42	170	140	22	71	315	45	745	120	427	28	2-M63X1.5	1300
RY2-355M-2	610	116	730	710	655	560	750	254	75	M24x42	140	110	20	67.5	355	52	845	160	454	28	2-M63X1.5	1500
RY2-355M-4,6,8,10	610	116	730	710	655	560	750	254	95	M24x42	170	140	25	86	355	52	845	160	454	28	2-M63X1.5	1530
RY2-355L-2	610	116	730	710	655	630	750	254	75	M24x42	140	110	20	67.5	355	52	845	160	454	28	2-M63X1.5	1500
RY2-355L-4,6,8,10	610	116	730	710	655	630	750	254	95	M24x42	170	140	25	86	355	52	845	160	454	28	2-M63X1.5	1530

RY2外形及安装尺寸—B3 右出线 RY2 SERIES DIMENSIONS FOOT MOUNT B3 IM1001-T/Box RHS

RY2-315

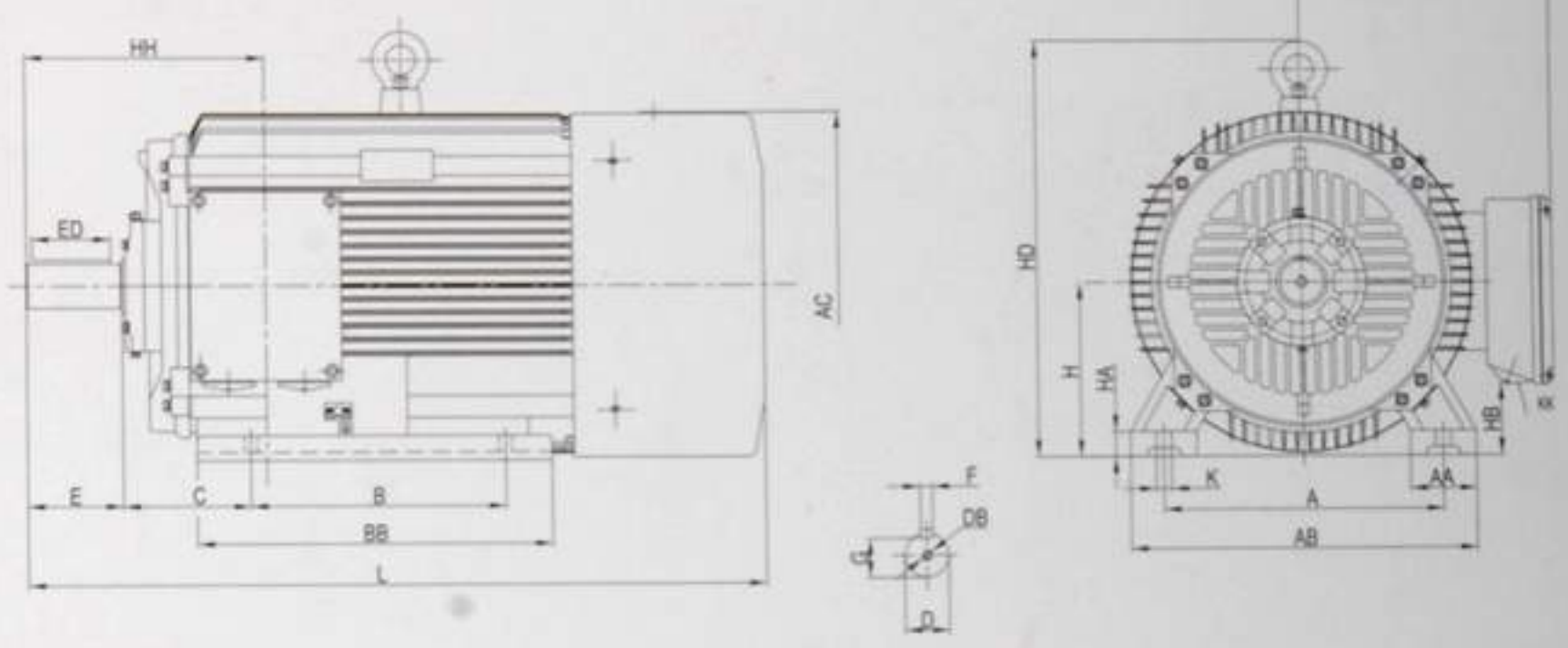

RY2-355

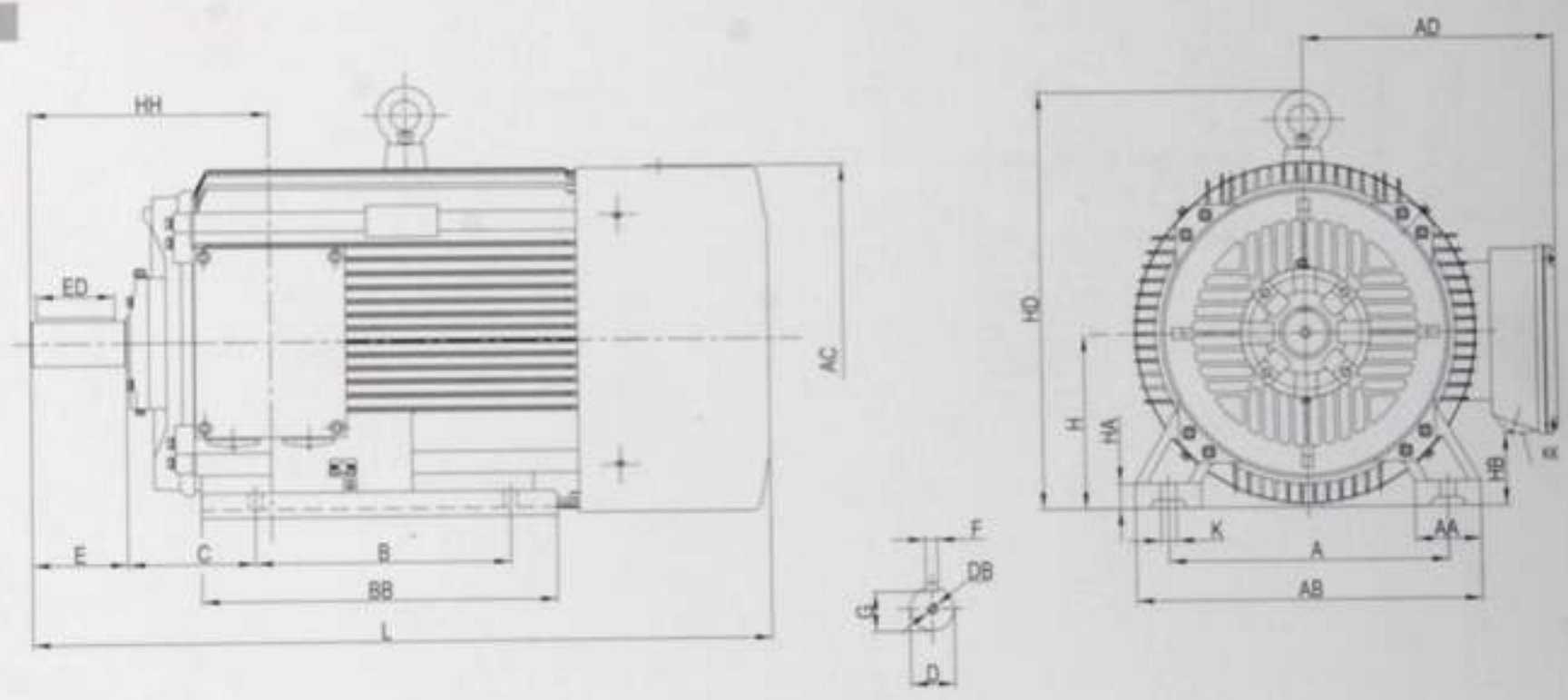

机座号 FRAME	A	AA	AB	AC	AD	B	BB	C	D	DB	E	ED	F	G	H	HA	HD	HB	HH	K	KK	L
RY2-315S-2	508	120	635	645	530	406	570	216	65	M24x42	140	110	18	58	315	45	745	120	397	28	2-M63X1.5	1160
RY2-315S-4,6,8,10	508	120	635	645	530	406	570	216	80	M24x42	170	140	22	71	315	45	745	120	427	28	2-M63X1.5	1270
RY2-315M-2	508	120	635	645	530	457	680	216	65	M24x42	140	110	18	58	315	45	745	120	397	28	2-M63X1.5	1190
RY2-315M-4,6,8,10	508	120	635	645	530	457	680	216	80	M24x42	170	140	22	71	315	45	745	120	427	28	2-M63X1.5	1300
RY2-315L-2	508	120	635	645	530	508	680	216	65	M24x42	140	110	18	58	315	45	745	120	397	28	2-M63X1.5	1190
RY2-315L-4,6,8,10	508	120	635	645	530	508	680	216	80	M24x42	170	140	22	71	315	45	745	120	427	28	2-M63X1.5	1300
RY2-355M-2	610	116	730	710	655	560	750	254	75	M24x42	140	110	20	67.5	355	52	845	160	454	28	2-M63X1.5	1500
RY2-355M-4,6,8,10	610	116	730	710	655	560	750	254	95	M24x42	170	140	25	86	355	52	845	160	454	28	2-M63X1.5	1530
RY2-355L-2	610	116	730	710	655	630	750	254	75	M24x42	140	110	20	67.5	355	52	845	160	454	28	2-M63X1.5	1500
RY2-355L-4,6,8,10	610	116	730	710	655	630	750	254	95	M24x42	170	140	25	86	355	52	845	160	454	28	2-M63X1.5	1530

RY2外形及安装尺寸—B35 右出线 RY2 SERIES DIMENSIONS FOOT AND FLANGE MOUNT B35 IM2001-T/Box RHS

RY2-80~132

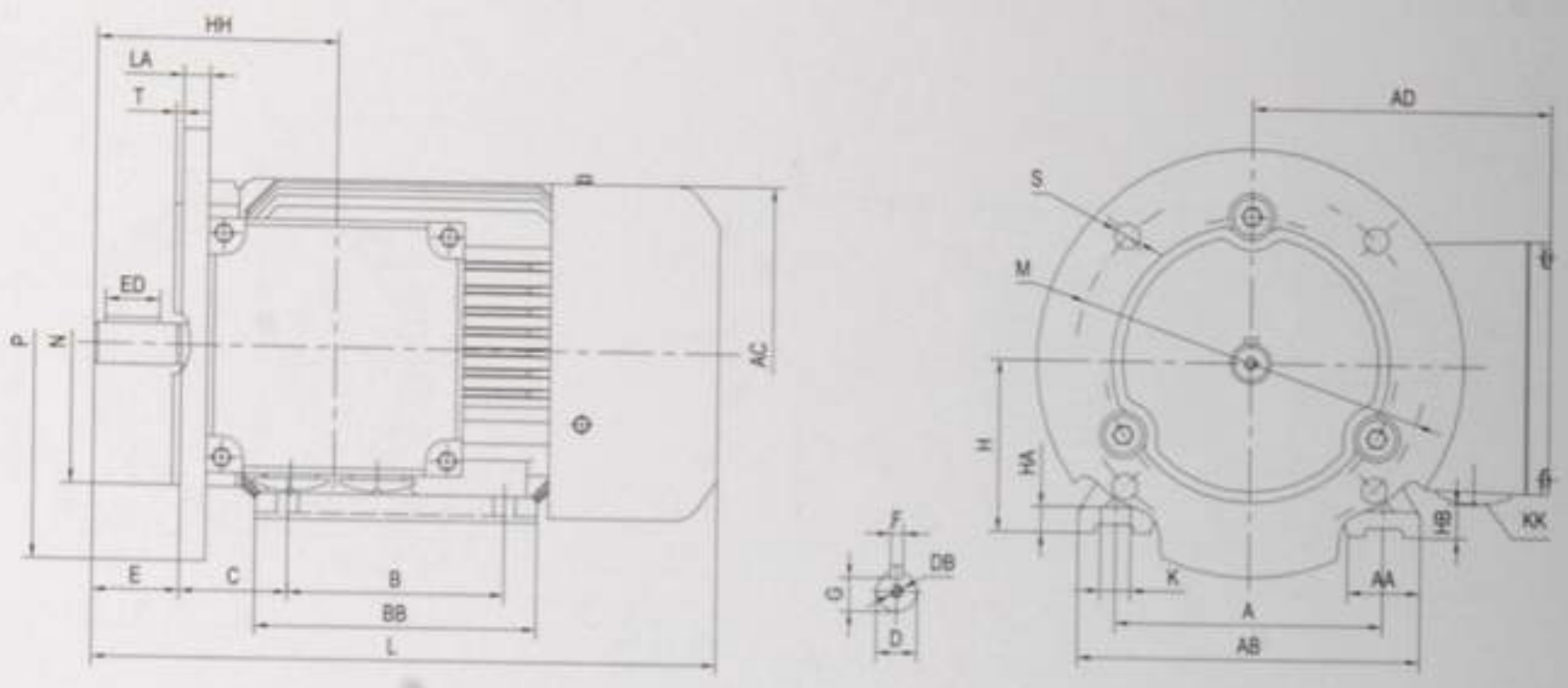

RY2-160~200

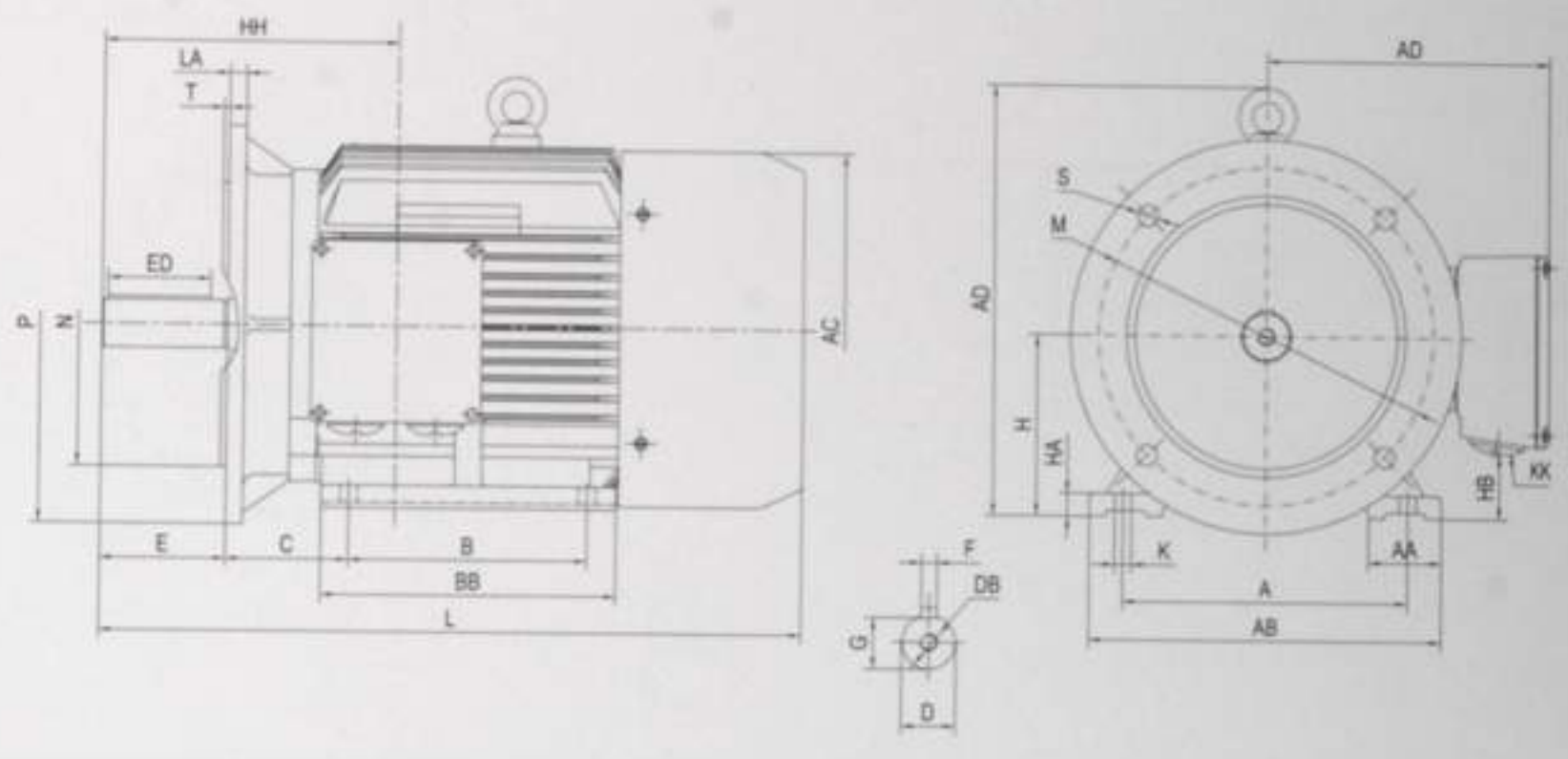

机座号 FRAME	A	AA	AB	AC	AD	B	BB	C	D	DB	E	ED	F	G	H	HA	HD	HE	HH	K	KK	L	LA	M	N	P	S	T
RY2-80	125	34	165	175	145	100	130	50	19	M6X16	40	25	6	15.5	80	12		20	112	10	2-M25X1.5	295	12	165	130	200	4×12	3.5
RY2-90S	140	36	180	195	155	100	140	56	24	M8X19	50	40	8	20	90	12		30	125	10	2-M25X1.5	320	12	165	130	200	4×12	3.5
RY2-90L	140	36	180	195	155	125	165	56	24	M8X19	50	40	8	20	90	12		30	125	10	2-M25X1.5	345	12	165	130	200	4×12	3.5
RY2-100L	160	40	205	215	180	140	176	63	28	M10X22	60	45	8	24	100	14	239	40	144	12	2-M25X1.5	385	12	215	180	250	4×14.5	4
RY2-112M	190	45	230	240	190	140	180	70	28	M10X22	60	45	8	24	112	13	263	43	147	12	2-M32X1.5	400	12	215	180	250	4×14.5	4
RY2-132S	216	55	270	275	210	140	190	89	38	M12X28	80	63	10	33	132	18	311	53	179	12	2-M32X1.5	470	14	265	230	300	4×14.5	4
RY2-132M	216	55	270	275	210	178	230	89	38	M12X28	80	63	10	33	132	18	311	53	179	12	2-M32X1.5	510	14	265	230	300	4×14.5	4
RY2-160M	254	65	320	330	255	210	260	108	42	M16x36	110	90	12	37	160	20	381	45	256	14.5	2-M40x1.5	615	15	300	250	350	4×18.5	5
RY2-160L	254	65	320	330	255	254	304	108	42	M16x36	110	90	12	37	160	20	381	45	256	14.5	2-M40x1.5	675	15	300	250	350	4×18.5	5
RY2-180M	279	70	355	380	280	241	311	121	48	M16X36	110	90	14	42.5	180	22	417	80	270	14.5	2-M40X1.5	700	18	300	250	350	4×18.5	5
RY2-180L	279	70	355	380	280	279	349	121	48	M16X36	110	90	14	42.5	180	22	417	80	270	14.5	2-M40X1.5	740	18	300	250	350	4×18.5	5
RY2-200L	318	70	395	420	305	305	369	133	55	M20X42	110	90	16	49	200	25	462	82	296	18.5	2-M50X1.5	770	18	350	300	400	4×18.5	5

RY2外形及安装尺寸—B35 右出线 RY2 SERIES DIMENSIONS FOOT AND FLANGE MOUNT B35 IM2001-T/Box RHS

RY2-225~280

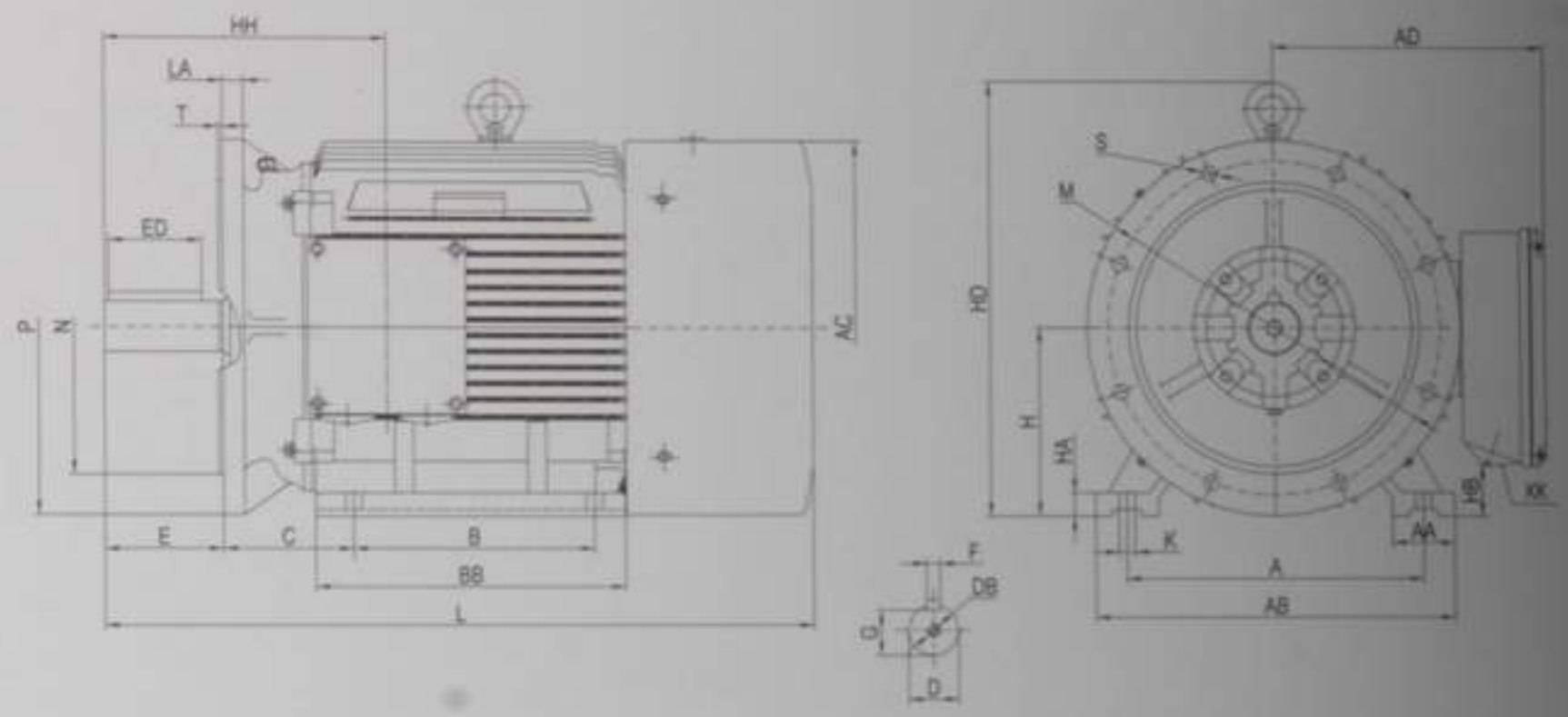

RY2-315

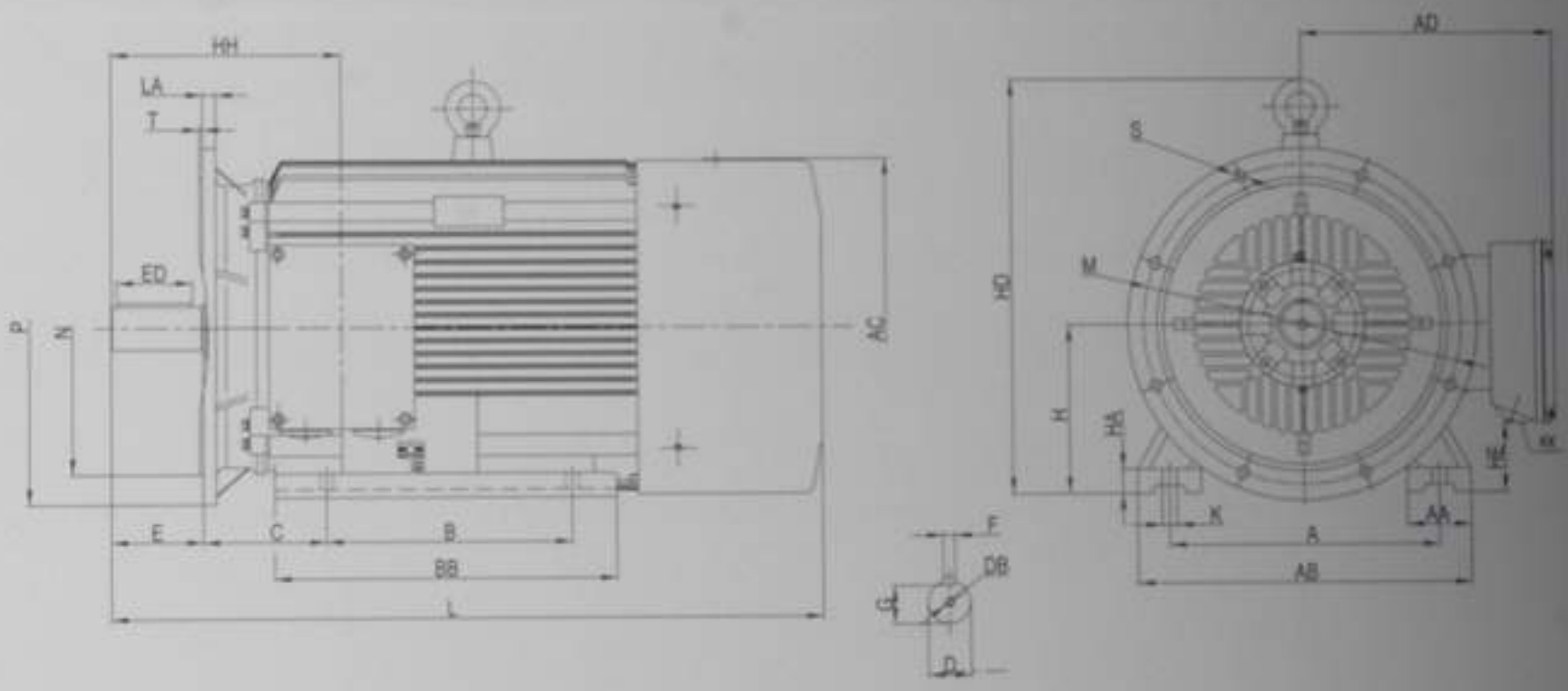

机座号 FRAME	A	AA	AB	AC	AD	B	BB	C	D	DB	E	ED	F	G	H	HA	HD	HE	HH	K	KK	L	LA	M	N	P	S	T
RY2-225S-4,8	356	75	435	470	335	286	368	149	60	M20X42	140	110	18	53	225	28	518	105	329	18.5	2-M50X1.5	815	20	400	350	450	8×18.5	5
RY2-225M-2	356	75	435	470	335	311	393	149	55	M20X42	110	90	16	49	225	28	518	105	299	18.5	2-M50X1.5	820	20	400	350	450	8×18.5	5
RY2-225M-4,6,8	356	75	435	470	335	311	393	149	60	M20X42	140	110	18	53	225	28	518	105	329	18.5	2-M50X1.5	845	20	400	350	450	8×18.5	5
RY2-250M-2	406	80	490	510	370	349	445	168	60	M20X42	140	110	18	53	250	30	566	102	349	24	2-M63X1.5	910	22	500	450	550	8×18.5	5
RY2-250M-4,6,8	406	80	490	510	370	349	445	168	65	M20X42	140	110	18	58	250	30	566	102	349	24	2-M63X1.5	910	22	500	450	550	8×18.5	5
RY2-280S-2	457	85	550	580	410	368	485	190	65	M20X42	140	110	18	58	280	35	648	132	356	24	2-M63X1.5	985	22	500	450	550	8×18.5	5
RY2-280S-4,6,8	457	85	550	580	410	368	485	190	75	M20X42	140	110	20	67.5	280	35	648	132	356	24	2-M63X1.5	985	22	500	450	550	8×18.5	5
RY2-280M-2	457	85	550	580	410	419	536	190	65	M20X42	140	110	18	58	280	35	648	132	356	24	2-M63X1.5	1035	22	500	450	550	8×18.5	5
RY2-280M-4,6,8	457	85	550	580	410	419	536	190	75	M20X42	140	110	20	67.5	280	35	648	132	356	24	2-M63X1.5	1035	22	500	450	550	8×18.5	5
RY2-315S-2	508	120	635	645	530	406	570	216	65	M24x42	140	125	18	58	315	45	745	120	397	28	2-M63X1.5	1160	24	600	550	660	8×24	6
RY2-315S-4,6,8,10	508	120	635	645	530	406	680	216	80	M24x42	170	160	22	71	315	45	745	120	427	28	2-M63X1.5	1270	24	600	550	660	8×24	6
RY2-315M-2	508	120	635	645	530	457	680	216	65	M24x42	140	110	18	58	315	45	745	120	397	28	2-M63X1.5	1190	24	600	550	660	8×24	6
RY2-315M-4,6,8,10	508	120	635	645	530	457	680	216	80	M24x42	170	140	22	71	315	45	745	120	427	28	2-M63X1.5	1300	24	600	550	660	8×24	6
RY2-315L-2	508	120	635	645	530	508	680	216	65	M24x42	140	110	18	58	315	45	745	120	397	28	2-M63X1.5	1190	24	600	550	660	8×24	6
RY2-315L-4,6,8,10	508	120	635	645	530	508	680	216	80	M24x42	170	140	22	71	315	45	745	120	427	28	2-M63X1.5	1300	24	600	550	660	8×24	6

RY2外形及安装尺寸—B35 右出线 RY2 SERIES DIMENSIONS FOOT AND FLANGE MOUNT B35 IM2001-T/Box RHS

RY2-355

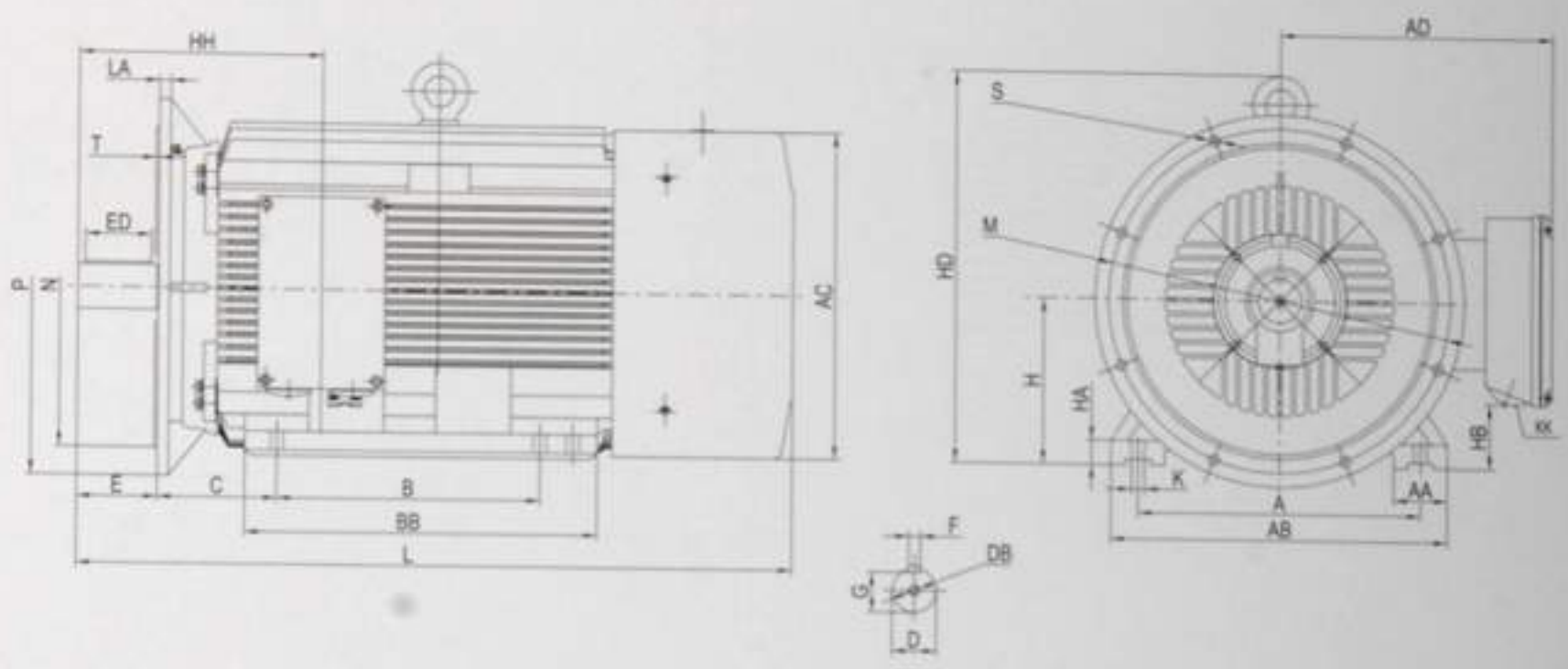

机座号 FRAME	A	AA	AB	AC	AD	B	BB	C	D	DB	E	ED	F	G	H	HA	HD	HE	HH	K	KK	L	LA	M	N	P	S	T
RY2-355M-2	610	116	730	710	655	560	750	254	75	M24x42	140	110	20	67.5	355	52	845	160	424	28	2-M63X1.5	1500	24	740	680	800	8×24	6
RY2-355M-4,6,8,10	610	116	730	710	655	560	750	254	95	M24x42	170	140	25	86	355	52	845	160	454	28	2-M63X1.5	1530	24	740	680	800	8×24	6
RY2-355L-2	610	116	730	710	655	630	750	254	75	M24x42	140	110	20	67.5	355	52	845	160	424	28	2-M63X1.5	1500	24	740	680	800	8×24	6
RY2-355L-4,6,8,10	610	116	730	710	655	630	750	254	95	M24x42	170	140	25	86	355	52	845	160	454	28	2-M63X1.5	1530	24	740	680	800	8×24	6

BEARING DATA

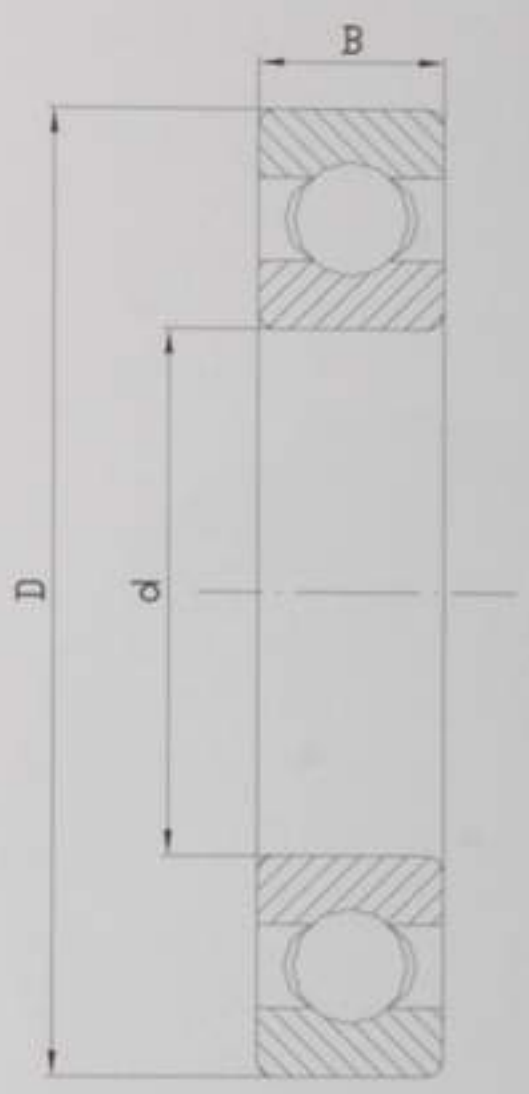

机座号 FRAME	DE	d	D	B	NDE	d	D	B
RY2-80	6204ZZCM	20	47	14	6204ZZCM	20	47	14
RY2-90	6205ZZCM	25	52	15	6205ZZCM	25	52	15
RY2-100	6206ZZCM	30	62	16	6206ZZCM	30	62	16
RY2-112	6206ZZCM	30	62	16	6206ZZCM	30	62	16
RY2-132	6208ZZCM	40	80	18	6208ZZCM	40	80	18
RY2-160-2	6209ZZCM	45	85	19	6209ZZCM	45	85	19
RY2-160-4,6	6309ZZCM	45	100	25	6209ZZCM	45	85	19
RY2-180-2	6211C3	55	100	21	6211C3	55	100	21
RY2-180-4,6	6311C3	55	120	29	6211C3	55	100	21
RY2-200L-2	6212C3	60	110	22	6212C3	60	110	22
RY2-200L-4,6	6312C3	60	130	31	6212C3	60	110	22
RY2-225M-2	6312C3	60	130	31	6312C3	60	130	31
RY2-225 -4,6	6313C3	65	140	33	6312C3	60	130	31
RY2-250M-2	6313C3	65	140	33	6313C3	65	140	33
RY2-250M-4,6	6314C3	70	150	35	6313C3	65	140	33
RY2-280-2	6314C3	70	150	35	6314C3	70	150	35
RY2-280-4,6	6317C3	85	180	41	6314C3	70	150	35
RY2-315-2	6317C3	85	180	41	6317C3	85	180	41
RY2-315-4,6	6319C3	95	200	45	6319C3	95	200	45
RY2-355-2	6319C3	95	200	45	6319C3	95	200	45
RY2-355-4,6	N322C3	110	240	50	6322C3	110	240	50

OIL SEAL DATA

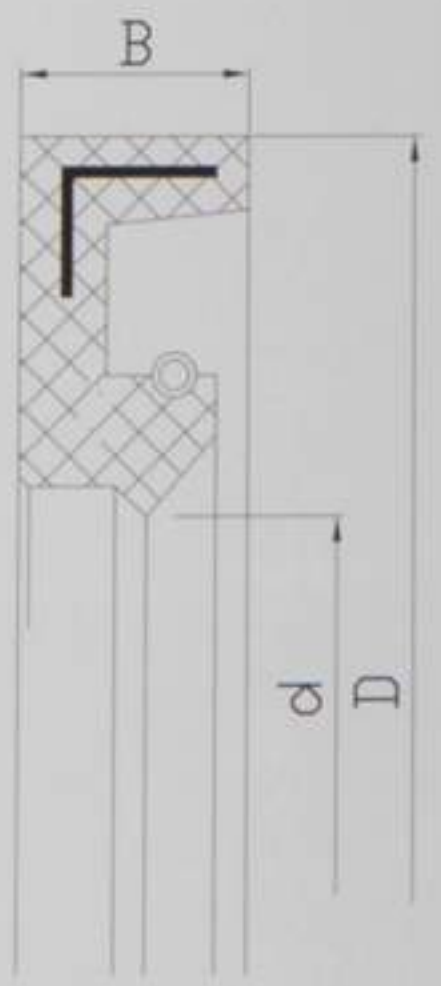

机座号 FRAME	DE			NDE		
	d	D	B	d	D	B
RY2-80	20	35	7	20	35	7
RY2-90	25	40	7	25	40	7
RY2-100	30	42	7	30	42	7
RY2-112	30	42	7	30	42	7
RY2-132	40	55	8	40	55	8
RY2-160	45	65	8	45	65	8
RY2-180	55	72	8	55	72	8
RY2-200	60	80	8	60	80	8
RY2-225M-2	60	80	8	60	80	8
RY2-225-4,6	65	85	10	60	80	8
RY2-250M-2	65	85	10	65	85	10
RY2-250M-4,6	70	90	10	65	85	10
RY2-280-2	70	90	10	70	90	10
RY2-280-4,6	85	110	12	70	90	10
RY2-315-2	85	110	12	85	110	12
RY2-315-4,6	95	120	12	95	120	12
RY2-355-2	95	120	12	95	120	12
RY2-355-4,6	110	140	12	110	140	12