RONGJIA MOTOR

荣佳电机

RONGJIA MOTOR

Since 1978

YKK系列高压三相异步电动机

YKK SERIES HIGH VOLTAGE THREE PHASE INDUCTION MOTORS

ISO9001 TS16949 ISO14001

荣成市荣佳动力有限公司

RONGCHENG RONGJIA POWER CO.,LTD.

RONGJIA MOTOR

公司简介 BRIEF INTRODUCTION

荣成市荣佳动力有限公司是由荣成市荣佳电机有限公司控股成立的公司，继承了荣佳电机主营业务，占地面积9万m^2，建筑面积3.7万m^2，总资产2亿元。

年可生产各种电动机400万kW，现有员工400余人，是集科研开发、生产制造、销售服务于一体的现代化电机专业生产企业。

公司获得了自营进出口权，并先后取得了ISO9001、TS16949、ISO14001、南非SABS认证、CCC认证、CE、UL、节能认证、出口机电产品质量许可证等认证证书，为广大客户提供优质产品和服务提供了保障。

公司主导产品有三相异步电动机及其派生的特种电机(变极多速，变频调速，矿山专用，高温消防），永磁同步电机（直驱螺杆泵电机，曳引机），开关磁阻电机（电动汽车、压力机等用途）等；产品畅销全国各地，并远销欧洲、非洲、东南亚、澳洲、美国等国家和地区，深受用户好评。

RONGCHENG RONGJIA POWER CO.,LTD. is established and held by Rongcheng Rongjia Electric Machine Co., Ltd, and succeeded the main business of Rongjia Electric Machine. It covers an area of 90000 m^2 which includes building area 37000 m^2, the total asset is 0.2 billion yuan.

The annual production capacity is 4 million kW and there are 400 staffs and workers; Rongcheng Rongjia Power Co., Ltd has become one professional modern motor manufacturer that includes R&D, manufacture and distribution.

The company possesses the right of managing Import and Export Business. It obtains ISO9001, TS16949, ISO14001, South-Africa SABS Certificate, CCC Certificate, CE, UL, Economical Energy Certificate, the Exporting Electric Products Quality licence that guarantees good quality products and services for our customers.

The leading products are three-phase induction motors and deriving special motors (multi-speed motor; inverter motor; mine winch motor, high-temperature fire-fighting motors), permanent magnet synchronous motor (direct drive screw pump motor, traction machine), switched reluctance motor (for electric vehicle, pressure machine) and so on; The products have a good sale and reputation in domestic and overseas markets, such as Europe, Africa, South-east Asia, Australia, America.

生产制造 PRODUCTION AND MANUFACTURE

RONGJIA MOTOR

YKK系列高压三相异步电动机
YKK Series High-Voltage Three-Phase Induction Motor

YKK系列6kV（机座号355-630）、YKK系列10kV（机座号450-630）高压三相异步电动机绝缘等级F级，额定频率50Hz，S1连续工作制，防护等级IP44或IP54，冷却方式IC611，顶部带有空-空冷却器，安装形式为IMB3（卧式带底脚），机座号630电机冷却器带风机，冷却方式为IC616。

YKK series (6kV) (H355-630)、YKK series (10kV) (H450-630) high voltage three phase induction motors with insulation class F, rated frequency 50Hz, protection class IP44 or IP54, cooling method IC611, having air-air cooler on the top, mounting arrangements IMB3. 2 poles motor has cooler with ventilator for size 630 , cooling method IC616.

6KV PERFORMANCE DATA

型号 MOTOR TYPE	额定功率 RATED POWER kW	额定转速 RATED SPEED (r/min)	额定电流 RATED CURRENT (A)	效率 EFF η (%)	功率因数 POWER FACTOR (cos φ)	堵转转矩/额定转矩 TST/TFL	堵转电流/额定电流 IST/IFL	最大转矩/额定转矩 TM/TFL	重量 WEIGHT (kg)
YKK355$_1$-2	220	2975	26.9	92.5	0.85	0.6	7.0	1.8	2470
YKK355$_2$-2	250	2975	30.6	92.6	0.85	0.6	7.0	1.8	2700
YKK355$_3$-2	280	2975	34.2	92.8	0.85	0.6	7.0	1.8	2730
YKK355$_4$-2	315	2975	38.3	93.1	0.85	0.6	7.0	1.8	2750
YKK355$_1$-4	185	1485	22.6	92.8	0.85	0.7	6.5	1.8	2280
YKK355$_2$-4	200	1485	24.4	92.9	0.85	0.7	6.5	1.8	2325
YKK355$_3$-4	220	1485	26.8	93.0	0.85	0.7	6.5	1.8	2390
YKK355$_4$-4	250	1485	30.4	93.1	0.85	0.7	6.5	1.8	2450
YKK400$_2$-2	355	2975	42.5	93.4	0.86	0.6	7.0	1.8	3540
YKK400$_3$-2	400	2975	47.8	93.7	0.86	0.6	7.0	1.8	3570
YKK400$_4$-2	450	2975	53.6	94.0	0.86	0.6	7.0	1.8	3590
YKK400$_5$-2	500	2975	59.4	94.2	0.86	0.6	7.0	1.8	3620
YKK400$_2$-4	280	1485	33.6	93.2	0.86	0.7	6.5	1.8	3780
YKK400$_3$-4	315	1485	37.8	93.3	0.86	0.7	6.5	1.8	3845
YKK400$_4$-4	355	1485	42.5	93.5	0.86	0.7	6.5	1.8	3925
YKK400$_5$-4	400	1485	47.8	93.7	0.86	0.7	6.5	1.8	4050
YKK400$_6$-4	450	1485	53.6	93.9	0.86	0.7	6.5	1.8	4160
YKK400$_1$-6	185	990	23.5	92.4	0.82	0.7	6.0	1.8	2470
YKK400$_2$-6	200	990	25.3	92.6	0.82	0.7	6.0	1.8	2520
YKK400$_3$-6	220	990	27.8	92.8	0.82	0.7	6.0	1.8	3860
YKK400$_4$-6	250	990	31.5	93.0	0.82	0.7	6.0	1.8	3900
YKK400$_5$-6	280	990	35.2	93.3	0.82	0.7	6.0	1.8	3950
YKK400$_6$-6	315	990	39.5	93.5	0.82	0.7	6.0	1.8	4060
YKK400$_4$-8	185	740	24.7	92.5	0.78	0.8	5.5	1.8	3830
YKK400$_5$-8	200	740	26.6	92.7	0.78	0.8	5.5	1.8	3890
YKK400$_6$-8	220	740	29.2	92.9	0.78	0.8	5.5	1.8	3940
YKK450$_2$-2	560	2975	66.4	94.4	0.86	0.6	7.0	1.8	4325
YKK450$_3$-2	630	2975	73.7	94.6	0.87	0.6	7.0	1.8	4300

6KV PERFORMANCE DATA

型号 MOTOR TYPE	额定功率 RATED POWER kW	额定转速 RATED SPEED (r/min)	额定电流 RATED CURRENT (A)	效率 EFF η (%)	功率因数 POWER FACTOR (cos φ)	堵转转矩/额定转矩 TST/TFL	堵转电流/额定电流 IST/IFL	最大转矩/额定转矩 TM/TFL	重量 WEIGHT (kg)
YKK450$_1$-2	710	2975	82.9	94.7	0.87	0.6	7.0	1.8	4365
YKK450$_2$-2	800	2975	93.3	94.8	0.87	0.6	7.0	1.8	4430
YKK450$_2$-4	500	1485	59.5	94.0	0.86	0.7	6.5	1.8	4370
YKK450$_3$-4	560	1485	66.5	94.2	0.86	0.7	6.5	1.8	4460
YKK450$_4$-4	630	1485	74.7	94.4	0.86	0.7	6.5	1.8	4530
YKK450$_5$-4	710	1485	84.0	94.6	0.86	0.7	6.5	1.8	4680
YKK450$_2$-6	355	990	43.9	93.7	0.83	0.7	6.0	1.8	4300
YKK450$_3$-6	400	990	49.4	93.8	0.83	0.7	6.0	1.8	4350
YKK450$_4$-6	450	990	55.4	94.1	0.83	0.7	6.0	1.8	4470
YKK450$_5$-6	500	990	61.5	94.3	0.83	0.7	6.0	1.8	4600
YKK450$_2$-8	250	740	32.7	93.0	0.79	0.8	5.5	1.8	4110
YKK450$_3$-8	280	740	36.6	93.2	0.79	0.8	5.5	1.8	4200
YKK450$_4$-8	315	740	41.1	93.4	0.79	0.8	5.5	1.8	4330
YKK450$_5$-8	355	740	46.2	93.5	0.79	0.8	5.5	1.8	4460
YKK450$_1$-10	185	595	25.9	91.7	0.75	0.8	5.5	1.8	4080
YKK450$_2$-10	200	595	27.9	91.9	0.75	0.8	5.5	1.8	4130
YKK450$_3$-10	220	595	30.6	92.1	0.75	0.8	5.5	1.8	4210
YKK450$_4$-10	250	595	34.8	92.3	0.75	0.8	5.5	1.8	4280
YKK450$_5$-10	280	595	38.8	92.5	0.75	0.8	5.5	1.8	4520
YKK450$_4$-12	185	495	27.7	91.8	0.70	0.8	5.5	1.8	4350
YKK450$_5$-12	200	495	29.9	92.0	0.70	0.8	5.5	1.8	4370
YKK500$_1$-2	900	2975	104.8	95.0	0.87	0.6	7.0	1.8	5310
YKK500$_2$-2	1000	2975	116.3	95.1	0.87	0.6	7.0	1.8	5510
YKK500$_3$-2	1120	2975	130.1	95.2	0.87	0.6	7.0	1.8	5710
YKK500$_4$-2	1250	2975	145.1	95.3	0.87	0.6	7.0	1.8	5910
YKK500$_1$-4	800	1485	93.3	94.8	0.87	0.7	6.5	1.8	5500
YKK500$_2$-4	900	1485	104.9	94.9	0.87	0.7	6.5	1.8	5830
YKK500$_3$-4	1000	1485	116.4	95.0	0.87	0.7	6.5	1.8	6025

6KV PERFORMANCE DATA

型号 MOTOR TYPE	额定功率 RATED POWER KW	额定转速 RATED SPEED (r/min)	额定电流 RATED CURRENT (A)	效率 EFF η (%)	功率因数 POWER FACTOR (cos φ)	堵转转矩/额定转矩 TST/TFL	堵转电流/额定电流 IST/IFL	最大转矩/额定转矩 TM/TFL	重量 WEIGHT (kg)
YKK560$_1$-8	800	740	99.1	94.7	0.82	0.7	6.0	1.8	7300
YKK560$_1$-10	500	595	65.9	93.6	0.78	0.7	6.0	1.8	5895
YKK560$_2$-10	560	595	73.7	93.7	0.78	0.7	6.0	1.8	8100
YKK560$_3$-10	630	595	82.9	93.8	0.78	0.7	6.0	1.8	8150
YKK560$_4$-10	710	595	93.2	94.0	0.78	0.7	6.0	1.8	8300
YKK560$_1$-12	355	495	49.6	93.0	0.74	0.7	6.0	1.8	6075
YKK560$_2$-12	400	495	55.8	93.3	0.74	0.7	6.0	1.8	6200
YKK560$_3$-12	450	495	62.7	93.4	0.74	0.7	6.0	1.8	7340
YKK560$_4$-12	500	495	69.4	93.7	0.74	0.7	6.0	1.8	7620
YKK630$_1$-2	2000	2975	228.5	95.7	0.88	0.6	7.0	1.8	9700
YKK630$_2$-2	2240	2975	255.7	95.8	0.88	0.6	7.0	1.8	9800
YKK630$_3$-2	2500	2975	285.1	95.9	0.88	0.6	7.0	1.8	10020
YKK630$_1$-4	1800	1485	206.1	95.5	0.88	0.6	6.5	1.8	11250
YKK630$_2$-4	2000	1485	228.8	95.6	0.88	0.6	6.5	1.8	12220
YKK630$_3$-4	2240	1485	255.9	95.7	0.88	0.6	6.5	1.8	13100
YKK630$_1$-6	1250	990	146.8	95.3	0.86	0.7	6.5	1.8	8730
YKK630$_2$-6	1400	990	164.2	95.4	0.86	0.7	6.5	1.8	11250
YKK630$_3$-6	1600	990	187.5	95.5	0.86	0.7	6.5	1.8	10250
YKK630$_1$-8	900	740	108.8	94.8	0.84	0.7	6.0	1.8	8270
YKK630$_2$-8	1000	740	120.7	94.9	0.84	0.7	6.0	1.8	8675
YKK630$_3$-8	1120	740	135.1	95.0	0.84	0.7	6.0	1.8	9080
YKK630$_4$-8	1250	740	150.6	95.1	0.84	0.7	6.0	1.8	9485
YKK630$_1$-10	800	595	102.2	94.2	0.80	0.7	6.0	1.8	9250
YKK630$_2$-10	900	595	114.8	94.3	0.80	0.7	6.0	1.8	9550
YKK630$_3$-10	1000	595	127.4	94.4	0.80	0.7	6.0	1.8	9850
YKK630$_4$-10	1120	595	142.4	94.6	0.80	0.7	6.0	1.8	10400
YKK630$_1$-12	560	495	75.6	93.8	0.76	0.7	6.0	1.8	7900
YKK630$_2$-12	630	495	84.9	93.9	0.76	0.7	6.0	1.8	10700
YKK630$_3$-12	710	495	95.6	94.0	0.76	0.7	6.0	1.8	10980
YKK630$_4$-12	800	495	107.5	94.2	0.76	0.7	6.0	1.8	11260

6KV PERFORMANCE DATA

型号 MOTOR TYPE	额定功率 RATED POWER kW	额定转速 RATED SPEED (r/min)	额定电流 RATED CURRENT (A)	效率 EFF η (%)	功率因数 POWER FACTOR (cos φ)	堵转转矩/额定转矩 TST TFL	堵转电流/额定电流 IST IFL	最大转矩/额定转矩 TM TFL	重量 WEIGHT (kg)
YKK500$_4$-4	1120	1485	130.3	95.1	0.87	0.7	6.5	1.8	6235
YKK500$_1$-6	560	990	68.0	94.4	0.84	0.7	6.0	1.8	5515
YKK500$_2$-6	630	990	76.4	94.5	0.84	0.7	6.0	1.8	5590
YKK500$_3$-6	710	990	85.8	94.8	0.84	0.7	6.0	1.8	5810
YKK500$_4$-6	800	990	96.6	94.9	0.84	0.7	6.0	1.8	6010
YKK500$_1$-8	400	740	51.3	93.7	0.80	0.8	5.5	1.8	5265
YKK500$_2$-8	450	740	57.7	93.8	0.80	0.8	5.5	1.8	5425
YKK500$_3$-8	500	740	63.8	94.2	0.80	0.8	5.5	1.8	5605
YKK500$_4$-8	560	740	71.4	94.4	0.80	0.8	5.5	1.8	5775
YKK500$_1$-10	315	595	43.0	92.8	0.76	0.8	5.5	1.8	5280
YKK500$_2$-10	355	595	48.3	93.0	0.76	0.8	5.5	1.8	5375
YKK500$_3$-10	400	595	54.3	93.3	0.76	0.8	5.5	1.8	5540
YKK500$_4$-10	450	595	61.0	93.4	0.76	0.8	5.5	1.8	5700
YKK500$_1$-12	220	495	31.9	92.2	0.72	0.8	5.5	1.8	5220
YKK500$_2$-12	250	495	36.1	92.5	0.72	0.8	5.5	1.8	5395
YKK500$_3$-12	280	495	40.4	92.7	0.72	0.8	5.5	1.8	5555
YKK500$_4$-12	315	495	45.4	92.8	0.72	0.8	5.5	1.8	5815
YKK560$_1$-2	1400	2975	160.5	95.4	0.88	0.6	7.0	1.8	6700
YKK560$_2$-2	1600	2975	183.2	95.5	0.88	0.6	7.0	1.8	7100
YKK560$_3$-2	1800	2975	205.9	95.6	0.88	0.6	7.0	1.8	7500
YKK560$_1$-4	1250	1485	143.6	95.2	0.88	0.6	6.5	1.8	7150
YKK560$_2$-4	1400	1485	160.6	95.3	0.88	0.6	6.5	1.8	8100
YKK560$_3$-4	1600	1485	183.4	95.4	0.88	0.6	6.5	1.8	9050
YKK560$_1$-6	900	990	107.3	95.0	0.85	0.7	6.5	1.8	7650
YKK560$_2$-6	1000	990	119.0	95.1	0.85	0.7	6.5	1.8	7780
YKK560$_3$-6	1120	990	133.2	95.2	0.85	0.7	6.5	1.8	7900
YKK560$_1$-8	630	740	78.2	94.5	0.82	0.7	6.0	1.8	6850
YKK560$_2$-8	710	740	88.1	94.6	0.82	0.7	6.0	1.8	7050

6KV PERFORMANCE DATA

型号 MOTOR TYPE	额定功率 RATED POWER kW	额定转速 RATED SPEED (r/min)	额定电流 RATED CURRENT (A)	效率 EFF η (%)	功率因数 POWER FACTOR (cos φ)	堵转转矩/额定转矩 TST/TFL	堵转电流/额定电流 IST/IFL	最大转矩/额定转矩 TM/TFL	重量 WEIGHT (kg)
YKK560$_3$-8	800	740	99.1	94.7	0.82	0.7	6.0	1.8	7300
YKK560$_1$-10	500	595	65.9	93.6	0.78	0.7	6.0	1.8	5895
YKK560$_2$-10	560	595	73.7	93.7	0.78	0.7	6.0	1.8	8100
YKK560$_3$-10	630	595	82.9	93.8	0.78	0.7	6.0	1.8	8150
YKK560$_4$-10	710	595	93.2	94.0	0.78	0.7	6.0	1.8	8300
YKK560$_1$-12	355	495	49.6	93.0	0.74	0.7	6.0	1.8	6075
YKK560$_2$-12	400	495	55.8	93.3	0.74	0.7	6.0	1.8	6200
YKK560$_3$-12	450	495	62.7	93.4	0.74	0.7	6.0	1.8	7340
YKK560$_4$-12	500	495	69.4	93.7	0.74	0.7	6.0	1.8	7620
YKK630$_1$-2	2000	2975	228.5	95.7	0.88	0.6	7.0	1.8	9700
YKK630$_2$-2	2240	2975	255.7	95.8	0.88	0.6	7.0	1.8	9800
YKK630$_3$-2	2500	2975	285.1	95.9	0.88	0.6	7.0	1.8	10020
YKK630$_1$-4	1800	1485	206.1	95.5	0.88	0.6	6.5	1.8	11250
YKK630$_2$-4	2000	1485	228.8	95.6	0.88	0.6	6.5	1.8	12220
YKK630$_3$-4	2240	1485	255.9	95.7	0.88	0.6	6.5	1.8	13100
YKK630$_1$-6	1250	990	146.8	95.3	0.86	0.7	6.5	1.8	8730
YKK630$_2$-6	1400	990	164.2	95.4	0.86	0.7	6.5	1.8	11250
YKK630$_3$-6	1600	990	187.5	95.5	0.86	0.7	6.5	1.8	10250
YKK630$_1$-8	900	740	108.8	94.8	0.84	0.7	6.0	1.8	8270
YKK630$_2$-8	1000	740	120.7	94.9	0.84	0.7	6.0	1.8	8675
YKK630$_3$-8	1120	740	135.1	95.0	0.84	0.7	6.0	1.8	9080
YKK630$_4$-8	1250	740	150.6	95.1	0.84	0.7	6.0	1.8	9485
YKK630$_1$-10	800	595	102.2	94.2	0.80	0.7	6.0	1.8	9250
YKK630$_2$-10	900	595	114.8	94.3	0.80	0.7	6.0	1.8	9550
YKK630$_3$-10	1000	595	127.4	94.4	0.80	0.7	6.0	1.8	9850
YKK630$_4$-10	1120	595	142.4	94.6	0.80	0.7	6.0	1.8	10400
YKK630$_1$-12	560	495	75.6	93.8	0.76	0.7	6.0	1.8	7900
YKK630$_2$-12	630	495	84.9	93.9	0.76	0.7	6.0	1.8	10700
YKK630$_3$-12	710	495	95.6	94.0	0.76	0.7	6.0	1.8	10980
YKK630$_4$-12	800	495	107.5	94.2	0.76	0.7	6.0	1.8	11260

10KV PERFORMANCE DATA

型号 MOTOR TYPE	额定功率 RATED POWER kW	额定转速 RATED SPEED (r/min)	额定电流 RATED CURRENT (A)	效率 EFF η (%)	功率因数 POWER FACTOR (cos φ)	堵转转矩/额定转矩 TST/TFL	堵转电流/额定电流 IST/IFL	最大转矩/额定转矩 TM/TFL	重量 WEIGHT (kg)
YKK450$_1$-2	220	2975	15.7	92.7	0.87	0.6	7.0	1.8	3100
YKK450$_2$-2	250	2975	17.9	92.8	0.87	0.6	7.0	1.8	3300
YKK450$_3$-2	280	2975	20.0	92.9	0.87	0.6	7.0	1.8	3500
YKK450$_4$-2	315	2975	22.4	93.2	0.87	0.6	7.0	1.8	3800
YKK450$_5$-2	355	2975	25.2	93.5	0.87	0.6	7.0	1.8	3850
YKK450$_6$-2	400	2975	28.3	93.8	0.87	0.6	7.0	1.8	3950
YKK450$_7$-2	450	2975	31.8	94.0	0.87	0.6	7.0	1.8	4050
YKK450$_8$-2	500	2975	35.3	94.1	0.87	0.6	7.0	1.8	4300
YKK450$_1$-4	220	1485	16.0	92.5	0.86	0.7	7.0	1.8	3540
YKK450$_2$-4	250	1485	18.1	92.6	0.86	0.7	7.0	1.8	3770
YKK450$_3$-4	280	1485	20.3	92.7	0.86	0.7	7.0	1.8	3870
YKK450$_4$-4	315	1485	22.8	92.9	0.86	0.7	7.0	1.8	3900
YKK450$_5$-4	355	1485	25.6	93.1	0.86	0.7	7.0	1.8	4210
YKK450$_6$-4	400	1485	28.8	93.3	0.86	0.7	7.0	1.8	4310
YKK450$_7$-4	450	1485	32.2	93.7	0.86	0.7	7.0	1.8	4500
YKK450$_8$-4	500	1485	35.8	93.8	0.86	0.7	7.0	1.8	4920
YKK450$_4$-6	220	990	16.8	92.1	0.82	0.7	6.0	1.8	4100
YKK450$_5$-6	250	990	19.1	92.2	0.82	0.7	6.0	1.8	4220
YKK450$_6$-6	280	990	21.3	92.4	0.82	0.7	6.0	1.8	4430
YKK450$_7$-6	315	990	24.0	92.6	0.82	0.7	6.0	1.8	4570
YKK450$_8$-6	355	990	26.6	92.9	0.83	0.7	6.0	1.8	4600
YKK500$_4$-2	560	2975	39.4	94.3	0.87	0.6	7.0	1.8	5770
YKK500$_5$-2	630	2975	44.3	94.4	0.87	0.6	7.0	1.8	5910
YKK500$_6$-2	710	2975	49.3	94.5	0.88	0.6	7.0	1.8	6050
YKK500$_7$-2	800	2975	55.5	94.6	0.88	0.6	7.0	1.8	6300
YKK500$_8$-2	900	2975	62.4	94.7	0.88	0.6	7.0	1.8	6450
YKK500$_4$-4	560	1485	40.0	94.0	0.86	0.7	7.0	1.8	5670
YKK500$_5$-4	630	1485	44.9	94.2	0.86	0.7	7.0	1.8	5860
YKK500$_6$-4	710	1485	49.7	94.8	0.87	0.7	7.0	1.8	6040
YKK500$_7$-4	800	1485	55.9	94.9	0.87	0.7	7.0	1.8	6070
YKK500$_8$-4	900	1485	62.2	95.0	0.88	0.7	7.0	1.8	6630

10KV PERFORMANCE DATA

型号 MOTOR TYPE	额定功率 RATED POWER kW	额定转速 RATED SPEED (r/min)	额定电流 RATED CURRENT (A)	效率 EFF η (%)	功率因数 POWER FACTOR (cos φ)	堵转转矩/额定转矩 TST/TFL	堵转电流/额定电流 IST/IFL	最大转矩/额定转矩 TM/TFL	重量 WEIGHT (kg)
YKK500$_4$-6	400	990	29.9	93.1	0.83	0.7	6.0	1.8	5450
YKK500$_5$-6	450	990	33.6	93.3	0.83	0.7	6.0	1.8	5710
YKK500$_6$-6	500	990	37.1	93.7	0.83	0.7	6.0	1.8	5890
YKK500$_7$-6	560	990	41.0	93.9	0.84	0.7	6.0	1.8	6120
YKK500$_8$-6	630	990	46.0	94.2	0.84	0.7	6.0	1.8	6680
YKK500$_2$-8	220	740	18.1	92.1	0.76	0.7	6.0	1.8	5250
YKK500$_3$-8	250	740	20.6	92.2	0.76	0.7	6.0	1.8	5440
YKK500$_4$-8	280	740	23.0	92.4	0.76	0.7	6.0	1.8	5670
YKK500$_5$-8	315	740	25.5	92.6	0.77	0.7	6.0	1.8	5710
YKK500$_6$-8	355	740	28.7	92.9	0.77	0.7	6.0	1.8	5770
YKK500$_7$-8	400	740	31.8	93.0	0.78	0.7	6.0	1.8	5830
YKK500$_8$-8	450	740	35.7	93.2	0.78	0.7	6.0	1.8	6370
YKK500$_5$-10	220	595	19.0	91.8	0.73	0.7	5.5	1.8	5770
YKK500$_6$-10	250	595	21.5	92.0	0.73	0.7	5.5	1.8	5940
YKK500$_7$-10	280	595	23.7	92.2	0.74	0.7	5.5	1.8	6130
YKK500$_8$-10	315	595	26.6	92.4	0.74	0.7	5.5	1.8	6200
YKK560$_1$-2	1000	2975	69.2	94.8	0.88	0.6	7.0	1.8	7000
YKK560$_2$-2	1120	2975	77.4	95.0	0.88	0.6	7.0	1.8	7200
YKK560$_3$-2	1250	2975	85.2	95.2	0.89	0.6	7.0	1.8	7400
YKK560$_1$-4	1000	1485	69.0	95.1	0.88	0.7	7.0	1.8	6900
YKK560$_2$-4	1120	1485	77.2	95.2	0.88	0.7	7.0	1.8	7100
YKK560$_3$-4	1250	1485	85.1	95.3	0.89	0.7	7.0	1.8	7300
YKK560$_1$-6	710	990	51.7	94.4	0.84	0.7	6.5	1.8	6950
YKK560$_2$-6	800	990	58.2	94.5	0.84	0.7	6.5	1.8	7300
YKK560$_3$-6	900	990	64.6	94.7	0.85	0.7	6.5	1.8	7400
YKK560$_4$-6	1000	990	71.6	94.9	0.85	0.7	6.5	1.8	7700
YKK560$_1$-8	500	740	39.0	93.6	0.79	0.7	6.0	1.8	7200
YKK560$_2$-8	560	740	43.7	93.7	0.79	0.7	6.0	1.8	7300
YKK560$_3$-8	630	740	47.1	94.2	0.82	0.7	6.0	1.8	7400
YKK560$_4$-8	710	740	53.0	94.4	0.82	0.7	6.0	1.8	7500
YKK560$_1$-10	355	595	29.5	92.6	0.75	0.7	6.0	1.8	6700

10KV PERFORMANCE DATA

型号 MOTOR TYPE	额定功率 RATED POWER KW	额定转速 RATED SPEED (r/min)	额定电流 RATED CURRENT (A)	效率 EFF η (%)	功率因数 POWER FACTOR (cos φ)	堵转转矩/额定转矩 TST/TFL	堵转电流/额定电流 IST/IFL	最大转矩/额定转矩 TM/TFL	重量 WEIGHT (kg)
YKK560$_2$-10	400	595	33.2	92.8	0.75	0.7	6.0	1.8	6900
YKK560$_3$-10	450	595	36.3	93.0	0.77	0.7	6.0	1.8	7100
YKK560$_4$-10	500	595	40.2	93.2	0.77	0.7	6.0	1.8	7300
YKK560$_5$-10	560	595	44.4	93.3	0.78	0.7	6.0	1.8	7500
YKK560$_1$-12	220	495	19.8	91.6	0.70	0.7	6.0	1.8	6600
YKK560$_2$-12	250	495	22.5	91.7	0.70	0.7	6.0	1.8	6700
YKK560$_3$-12	280	495	24.4	91.9	0.72	0.7	6.0	1.8	6900
YKK560$_4$-12	315	495	27.4	92.1	0.72	0.7	6.0	1.8	7100
YKK560$_5$-12	355	495	30.8	92.3	0.72	0.7	6.0	1.8	7300
YKK560$_6$-12	400	495	34.7	92.5	0.72	0.7	6.0	1.8	7500
YKK630$_1$-2	1400	2975	95.3	95.3	0.89	0.6	7.0	1.8	9200
YKK630$_2$-2	1600	2975	108.8	95.4	0.89	0.6	7.0	1.8	9500
YKK630$_3$-2	1800	2975	122.3	95.5	0.89	0.6	7.0	1.8	10000
YKK630$_1$-4	1400	1485	95.1	95.5	0.89	0.6	7.0	1.8	10500
YKK630$_2$-4	1600	1485	108.6	95.6	0.89	0.6	7.0	1.8	11000
YKK630$_3$-4	1800	1485	122.0	95.7	0.89	0.6	7.0	1.8	12200
YKK630$_1$-6	1120	990	80.0	95.1	0.85	0.6	6.5	1.8	9400
YKK630$_2$-6	1250	990	88.2	95.2	0.86	0.6	6.5	1.8	10400
YKK630$_3$-6	1400	990	98.4	95.5	0.86	0.6	6.5	1.8	16500
YKK630$_1$-8	800	740	59.6	94.5	0.82	0.7	6.0	1.8	9300
YKK630$_2$-8	900	740	67.0	94.6	0.82	0.7	6.0	1.8	9800
YKK630$_3$-8	1000	740	73.4	94.8	0.83	0.7	6.0	1.8	10000
YKK630$_1$-10	630	595	49.9	93.5	0.78	0.7	6.0	1.8	9400
YKK630$_2$-10	710	595	54.7	93.7	0.80	0.7	6.0	1.8	9650
YKK630$_3$-10	800	595	61.4	94.1	0.80	0.7	6.0	1.8	9850
YKK630$_4$-10	900	595	68.9	94.3	0.80	0.7	6.0	1.8	10500
YKK630$_1$-12	450	495	38.4	92.7	0.73	0.7	6.0	1.8	9400
YKK630$_2$-12	500	495	42.5	93.0	0.73	0.7	6.0	1.8	9650
YKK630$_3$-12	560	495	47.5	93.3	0.73	0.7	6.0	1.8	9850
YKK630$_4$-12	630	495	53.3	93.5	0.73	0.7	6.0	1.8	10500

6KV外形及安装尺寸图

6KV MOUNTING AND OVERALL DIMENSIONS

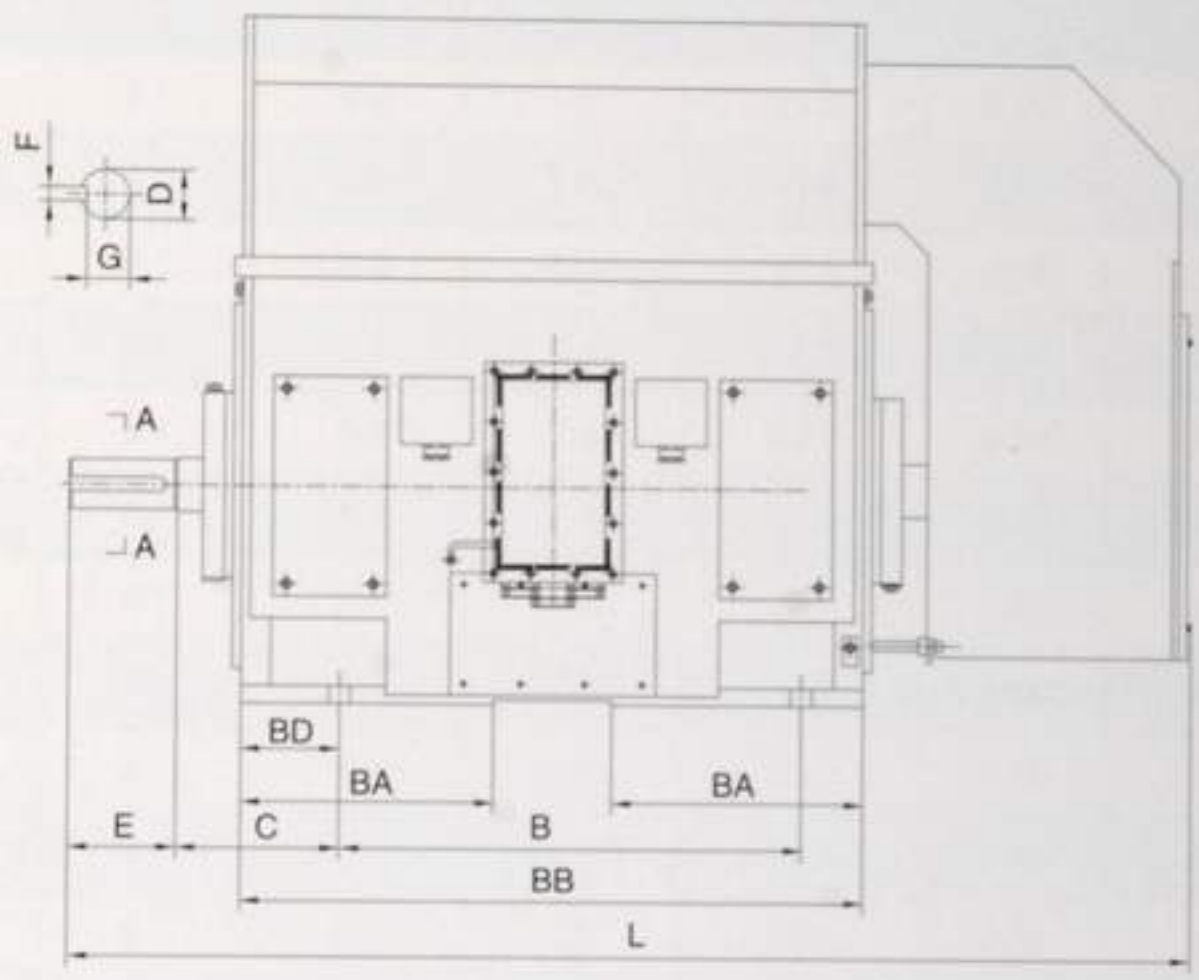

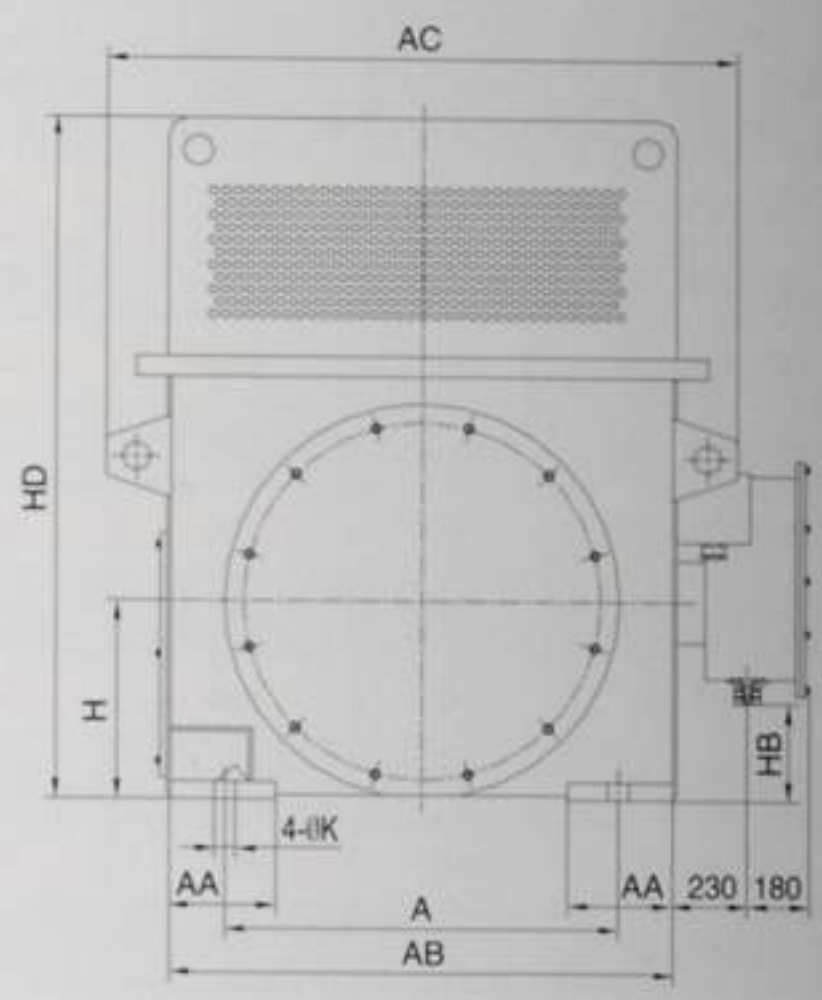

机座 FRAME	极数 POLES	安装尺寸 MOUNTING DIMENSIONS(mm)										外形尺寸 OVERALL DIMENSIONS(mm)								
		A	B	C	D		E	F	G	H	K	AA	AC	AB	BA	BB	BD	HD	HB	L
355	2	630	900	315	80	+0.030 +0.011	170	22	71	355	28	160	994	800	540	1380	200	1480	99	2150
355	4-6	630	900	315	100		210	28	90	355	28	160	994	800	540	1380	200	1480	99	2150
400	2	710	1000	375	90		170	25	81	400	35	210	1090	900	610	1520	230	1490	109	2290
400	4-8	710	1000	335	110	+0.035 +0.013	210	28	100	400	35	210	1094	900	610	1520	230	1490	109	2290
450	2	800	1120	400	100		210	28	90	450	35	210	1174	980	680	1640	230	1750	149	2430
450	4	800	1120	355	120		210	32	109	450	35	210	1174	980	680	1640	230	1550	149	2385
450	6-12	800	1120	355	130	+0.040 +0.015	250	32	119	450	35	210	1174	980	680	1640	230	1550	149	2425
500	2	900	1250	560	110	+0.035 +0.013	210	28	100	500	42	210	1314	1120	720	1750	305	1980	309	2630
500	4	900	1250	475	130		250	32	119	500	42	210	1314	1120	720	1750	305	1780	309	2600
500	6-12	900	1250	475	140		250	36	128	500	42	210	1314	1120	720	1750	305	1780	309	2600
560	2	1000	1400	560	130		250	32	119	560	42	210	1410	1220	710	1880	340	2100	387	2780
560	4	1000	1400	500	150	+0.040 +0.015	250	36	138	560	42	210	1410	1220	710	1880	340	1900	387	2780
560	6-12	1000	1400	500	160		300	40	147	560	42	210	1410	1220	710	1880	340	1900	387	2780
630	2	1120	1600	560	140		250	36	128	630	48	210	1620	1360	715	2020	300	2250	507	3040
630	4	1120	1600	530	170		300	40	157	630	48	210	1620	1360	715	2020	300	2250	507	2975
630	6-12	1120	1600	530	180		300	45	165	630	48	210	1620	1360	715	2020	300	2250	507	2975

10KV外形及安装尺寸图

10KV MOUNTING AND OVERALL DIMENSIONS

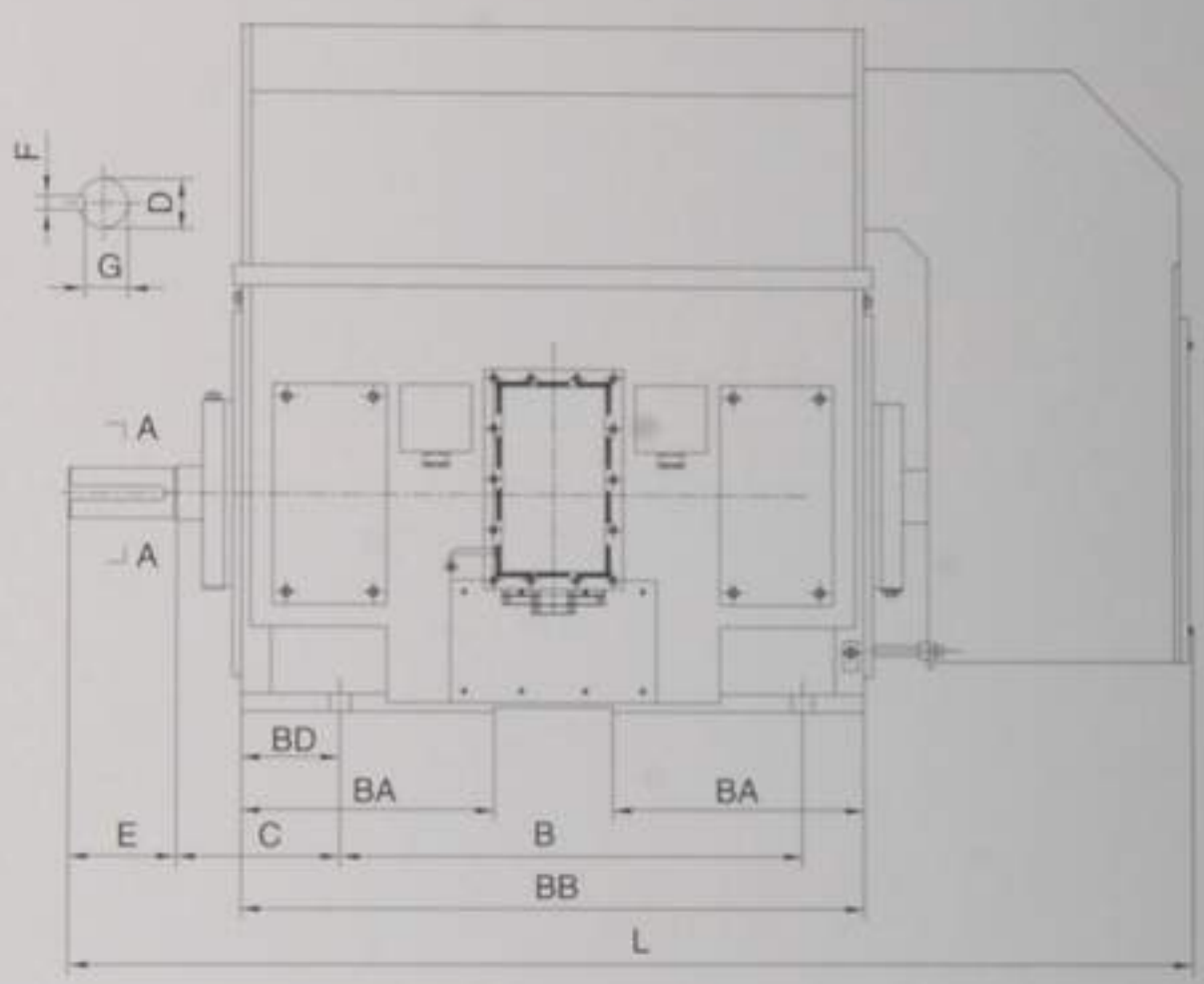

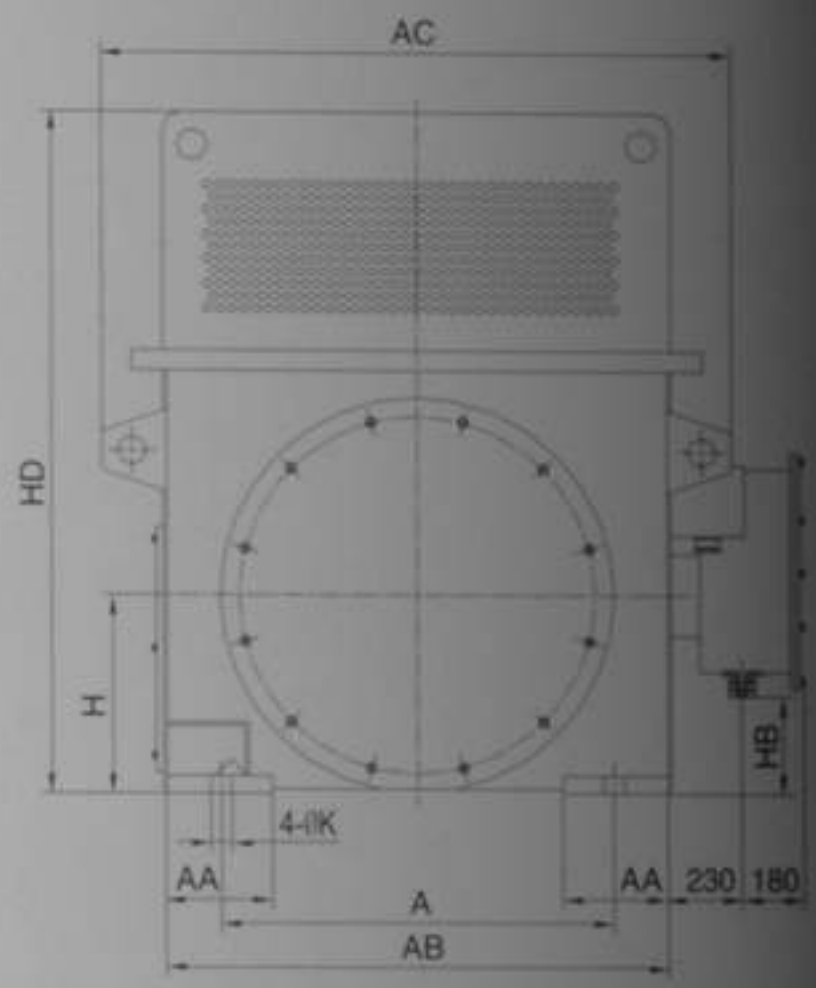

机座 FRAME	极数 POLES	安装尺寸 MOUNTING DIMENSIONS(mm)					外形尺寸 OVERALL DIMENSIONS(mm)													
		A	B	C	D		E	F	G	H	K	AA	AC	AB	BA	BB	BD	HD	HB	L
450	2	800	1120	400	90		170	25	81	450	35	210	1174	980	680	1640	230	1630	149	2390
450	4	800	1120	355	110	+0.035	210	28	100	450	35	210	1174	980	680	1640	230	1630	149	2390
450	6	800	1120	355	110	+0.013	210	28	100	450	35	210	1174	980	680	1640	230	1550	149	2390
500	2	900	1250	560	100		210	28	90	500	42	210	1314	1120	720	1750	305	1980	309	2645
500	4	900	1250	475	120		210	32	109	500	42	210	1314	1120	720	1750	305	1980	309	2560
500	6-10	900	1250	475	130		250	32	119	500	42	210	1314	1120	720	1750	305	1780	309	2600
560	2	1000	1400	560	130		250	32	119	560	42	210	1410	1220	710	1880	340	2100	387	2780
560	4	1000	1400	500	150	+0.040	250	36	138	560	42	210	1410	1220	710	1880	340	2100	387	2780
560	6-12	1000	1400	500	160	+0.015	300	40	147	560	42	210	1410	1220	710	1880	340	1900	387	2780
630	2	1120	1600	560	140		250	36	128	630	48	210	1620	1360	715	2020	300	2250	507	3040
630	4	1120	1600	530	170		300	40	157	630	48	210	1620	1360	715	2020	300	2250	507	2975
630	6-12	1120	1600	530	180		300	45	165	630	48	210	1620	1360	715	2020	300	2250	507	2975